APPLICATIONS

- Pick & place robotics
- Glass forming equipments
- Plastic bottle making
- Electronics / Semiconductor
- Automotive robotics & Transfer lines
- Assembling conveyors
- Material handling
- Printing machine
- Paper rolls
- Packing machinery
- Military
- Aerospace
- Cranes : Bridge & Trolley, Container, Overheads
- Steel mills : Slab ingot, Crushing, Turntable
- Elevator
- Railway : Coupler & Side Buffers, Fixed rail end stop, Friction stop
- Automated storage/Retrieved system
- Food/ Beverage
- Medical / Pharmaceutical equipments
- Textile

CLIENTS

DOOSAN 두산중공업 · DOOSAN 두산인프라코어 · 현대중공업 · HYUNDAI · KIA MOTORS · GM KOREA
POSCO · HYUNDAI STEEL · HANKOOK · KUMHO TIRES · HYUNDAI Rotem · 동부대우전자
SAMSUNG · LG전자 · LG U+ · EVERLAND · 서울랜드 · Hanwha
HYUNDAI POWERTECH · Mando · SEAH · HYUNDAI DYMOS · SFA · YUDO-STAR
SIEMENS · ThyssenKrupp · KRAUSSE Dämpfungstechnik · LIEBHERR Components · HITACHI Inspire the Next · TATA

Hydraulic Shock Absorbers & Buffers

Applications

Working Process

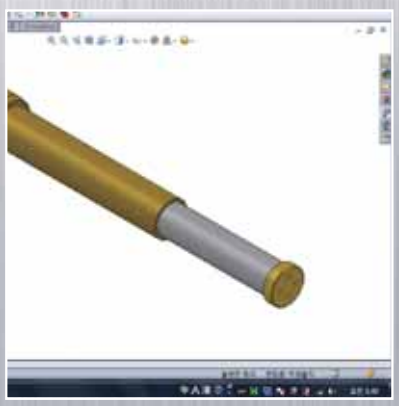

Design

Part machining

Part Inspection

Assembly

Product Inspection

Test

Packing

KOBA
Best Energy Absorption

At a glance

Adjustable type Shock Absorbers - KMA Series

Model	Stroke (mm) S	Max.Energy / Cycle (Nm) E_T	Max.Energy / Hour (Nm/h) E_TC	Effective Weight (kg) We	Recoil Force (N)		Weight (g)	Thread
					Ext	Comp		
KMA10-07	7	5.5	15,000	1-123	2.4	5.4	21	M10x1.0
KMA12-14	14	21.5	35,000	4-477	3.7	9.6	33	M12x1.0
KMA14-12	12	21.5	45,000	1.5-494	3.6	9.8	55	M14x1.5
-12LV				25.4-1,650				
KMA16-12	12	27	51,000	2-527	4.9	11.4	80	M16x1.5
-12LV				31.9-3,375				
KMA20-16	16	61	63,000	4.5-1,230	8	19.6	145	M20x1.5
-16LV				72.1-5,600				
KMA25-25	25	177	113,000	8.3-2,150	10.2	29.5	285	M25x1.5
-25LV				209.4-15,750				
KMA27-25(F)	25	177	113,000	8.3-2,150	10.2	29.5	305	M27x1.5(F) M27x3.0
-25(F)LV				209.4-15,750				
KMA27-40	40	283	149,000	20-5,120	10	31	429	M27x2.0
-40LV				334.9-25,200				
KMA30-35	35	356	137,000	25-6,950	17.8	50.3	610	M30x1.5
KMA33-25	25	314	120,000	25-6,980	17.5	48.8	454	M33x1.5
-25LV				97-60,930				
KMA33-50	50	628	150,000	50-14,000	13.6	65.3	580	M33x1.5
-50LV				192-120,312				
KMA36-25	25	346	125,000	25-6,980	25	56.2	725	M36x1.5
-25LV				97-60,930				
KMA36-50	50	692	160,000	50-14,000	22.5	60	885	M36x1.5
-50LV				192-120,312				

At a glance

Self Adjusting type Shock Absorbers - KMS Series

Model	Stroke (mm) S	Max. Energy / Cycle (Nm) E_T	Max. Energy / Hour (Nm/h) E_TC	Effective Weight (kg)			Recoil Force (N)		Weight (g)	Thread
				1	2	3	Ext	Comp		
KMS08-06	6	5	8,000	0.8-2.8	2.5-12.3	10-111	2.2	5.8	10	M8x1.0
KMS10-08	8	11	14,500	1.8-6.1	5.5-27	22-244	2.5	6.9	15.5	M10x1.0
KMS12-10	10	18	34,000	2.9-10	9-44	36-400	3.7	9.6	23	M12x1.0
KMS14-15(F)	15	34	51,000	5-18	17-84	68-755	3.8	13.3	43	M14x1.0(F) M14x1.5
KMS20-20	20	105	55,000	13-39	36-210	173-2,333	8.2	23	140	M20x1.5
KMS25-25(F)	25	226	69,000	28-85	78-452	373-5,022	11	29	265	M25x1.5(F) M25x2.0
KMS36-25	25	490	115,000	61-185	170-500	435-10,888	25	64.3	758	M36x1.5
LONG STROKE TYPE										
KMS14-20	20	13	45,500	2-7	6.5-32	26-288	3.6	13.9	71	M14x1.0
KMS20-30	30	52	31,100	8.5-28	26-128	104-1,155	6.3	16.8	188	M20x1.5
-50	50	82	37,800	13-45	41-202	164-1,822	7.8	16.6	268.6	
KMS25-40	40	110	94,000	18-60	55-271	220-2,444	13.7	30.9	342.5	M25x2.0
-50	50	120	41,000	19-66	60-296	240-2,666	13.9	30.5	457.5	
-80	80	160	54,200	26-88	80-395	320-3,555	14.9	29.8	577.5	
KMS36-50	50	220	162,000	35-121	110-543	440-4,888	24.4	44.6	994	M36x1.5
-80	80	340	232,800	55-188	170-839	680-7,555	25.4	45.6	1,280	

At a glance

Adjustable type Shock Absorbers - KSA Series

Model	Stroke (mm) S	Max.Energy / Cycle (Nm) E_T	Max.Energy / Hour (Nm/h) E_TC	Effective Weight (kg) We	Recoil Force (N)		Weight (kg)	Thread
					Ext	Comp		
KSA45-25	25	650	195,000	50-13,354	49.7	82.8	1.13	M45x1.5
-50	50	1,300	260,000	99-26,700	45.6	84	1.3	
-75	75	2,000	300,000	148-39,060	44.3	86.3	1.52	
KSA64-25	25	1,250	152,000	92-24,400	61.8	110	2.9	M64x2.0
-50	50	2,500	248,000	185-48,800	60.8	133.2	3.3	
-75	75	3,750	265,000	277-73,240	61.4	148.3	3.8	
-100	100	5,000	360,000	370-97,650	59.4	160.1	4	
-125	125	6,250	413,000	462-122,000	57.1	160.4	7.7	
-150	150	7,500	450,000	555-146,480	51	166.8	8.9	
KSA85-25	25	2,000	330,000	148-39,600	132	245.8	12.2	M85x2.0
-50	50	4,000	462,000	296-78,100	131.6	271.7	14.4	
-75	75	6,000	680,000	444-117,200	130	325.1	17	
-100	100	8,000	825,000	591-156,300	125.4	327.7	20	
-125	125	10,000	859,000	740-195,300	126.6	343.3	23.6	
-150	150	12,000	901,000	930-220,300	126.6	386.7	28	

At a glance

Adjustable type Shock Absorbers - KHA Series

Model	Stroke (mm) S	Max.Energy / Cycle (Nm) E_T	Max.Energy / Hour (Nm/h) E_TC	Effective Weight (kg) We	Recoil Force (N)		Weight (kg)	Thread
					Ext	Comp		
KHA42-25	25	250	125,000	36-3,600	28	56	1.25	M42X1.5
-25LV				295-52,000				
-50	50	500	166,000	45-6,150	38	86	1.4	
-50LV				591-104,000				
-75	75	750	200,000	54-9,500	32	88	1.6	
-75LV				887-156,000				
KHA64-50	50	1,300	270,000	82-12,600	65	148	3.7	M64x2.0
-50LV				4,062-277,500				
-100	100	2,600	360,000	115-17,000	45	157	4.5	
-100LV				8,125-555,000				
-150	150	3,900	420,000	140-22,000	47	199	5.3	
-150LV				12,187-832,500				
KHA85-50	50	2,300	370,000	200-37,000	148	315	6.4	M85X2.0
-90	90	4,000	650,000	230-40,000	121	365	7.6	
-125	125	5,700	930,000	300-43,000	114	365	8.6	
-165	165	7,300	1,210,000	360-45,000	98	429	9.8	
KHA115-50	50	3,700	1,501,000	370-44,000	187	427	16	M115x2.0
-100	100	7,400	1,805,000	370-57,000	178	482	19	
-150	150	11,100	2,100,000	370-89,000	185	538	21	
-200	200	14,800	2,405,000	390-118,000	185	665	31	
-250	250	18,500	2,710,000	440-145,000	184	649	34	

At a glance

Hydro-Pneumatic Buffers - KHG Series

Model	Stroke (mm) S	Max. Energy / Cycle (kJ) E_T	Max.Energy / Hour (kJ/h) E_TC	Max Buffer Force (kN) F_S	Recoil Force (kN)		Max Side Load Angle (°)		Weight (kg)
					Ext	Comp	R Type	F Type	
KHG 65-25	25	2	100	100		3.2	3.5	3.5	6
-50	50	4	200	100		4.7	3.5	3.5	7
-75	75	6	300	100		5.3	3	3	8
-100	100	8	400	100	1.0	6.6	3	3	9
-125	125	10	500	100		6.6	2.5	2.5	10
-150	150	12	600	100		6.6	2	2	11
-200	200	16	800	100		9	2	2	12
KHG 85-50	50	8	600	200		10	4	3.5	12
-100	100	16	1,200	200		13	3	3	15
-150	150	24	1,800	200	1.5	17	2	2	18
-200	200	32	2,400	200		19	1.8	1.5	20
-250	250	40	2,850	200		20	1.5	1.2	22
KHG 100-50	50	11	750	280		16	5	4	17
-80	80	18	1,200	280		16	4.5	4	20
-100	100	23	1,600	280		16	5	4	25
-120	120	27	1,800	280		20	4.5	3.5	27
-150	150	34	2,300	280		20	4.5	3.5	28
-200	200	46	3,100	280		20	4	3	34
-250	250	58	3,600	280	2.4	25	3.5	2.5	39
-300	300	69	4,200	280		25	3	2	43
-400	400	90	5,400	280		25	2.5	2	49
-500	500	110	6,600	275		25	2.5	2	55
-600	600	125	7,200	260		25	2	1.5	62
-800	800	140	7,900	210		25	2	1.5	73
KHG 120-100	100	45	2,900	570		38	4	4.5	41
-150	150	70	4,400	570		38	4	3.5	48
-200	200	92	5,800	570		38	3.5	3.5	58
-250	250	114	7,200	570		40	3	3	65
-300	300	130	8,500	450		40	3	2.5	72
-400	400	160	10,000	450	3.5	40	2.5	2	78
-500	500	180	11,500	450		40	2	1.5	86
-600	600	200	12,800	450		40	2	1.5	95
-800	800	240	13,600	375		40	2	1.3	112
-1000	1,000	280	14,500	350		40	2	1.3	118

Model	Stroke (mm) S	Max Energy / Cycle (kJ) E_T	Max.Energy / Hour (kJ/h) E_TC	Max Buffer Force (kN) F_S	Recoil Force (kN)		Max Side Load Angle (°)		Weight (kg)
					Ext	Comp	R Type	F Type	
KHG 130-250	250	120	8,200	550	4.5	40	4.5	4	85
-300	300	140	9,600	550		40	4.5	4	92
-400	400	180	12,000	550		50	4	3.5	106
-500	500	220	15,000	550		50	3.5	3.5	118
-600	600	260	17,800	550		50	2	1.5	127
-800	800	300	19,000	460		50	2	1.5	148
KHG 140-100	100	62	3,800	760	5.5	38	4.5	4	60
-150	150	91	5,800	760		65	4.5	4	72
-200	200	124	9,800	730		70	4	3.5	85
-300	300	175	12,000	730		70	3.5	2.5	110
-400	400	234	15,000	730		78	2.5	1.5	135
-500	500	270	17,000	680		78	2	1.3	150
-600	600	300	20,000	630		78	2	1.3	160
-800	800	325	25,000	510		78	2	1.3	185
-1000	1,000	360	27,500	450		78	1.6	1.2	200
KHG 150-100	100	70	4,000	880	6.2	45	4	4.5	77
-200	200	136	7,200	850		75	4	3.5	90
-300	300	183	13,000	770		75	3.5	3.5	135
-400	400	243	13,500	760		75	3	3	146
-500	500	285	17,400	710		85	3	2.5	166
-600	600	323	21,000	670		85	2.5	2	176
-800	800	367	25,600	580		85	2	1.5	220
-1000	1,000	410	28,000	510		85	2	1.5	253
KHG 180-100	100	80	4,500	980	8	75	4.5	4	110
-200	200	160	10,000	980		80	4.5	4	126
-250	250	200	12,800	980		80	4.5	4	140
-400	400	280	14,500	880		90	4.5	4	168
-500	500	350	18,000	880		100	4	3.5	198
-600	600	430	23,000	890		100	3.5	3	235
-800	800	570	27,000	890		100	3	2.5	295
-1000	1,000	720	29,000	890		110	2.5	2	360

At a glance

Hydraulic Buffers - KHS Series

Model	Stroke (mm) S	Max Energy / Cycle (kJ) E_T	Max Energy / Hour (kJ/h) E_TC	Max Buffer Force (kN) F_S	Recoil Force (kN)		Max Side Load Angle (°)	Weight (kg)
					Ext	Comp		
KHS 64-50	50	0.5	10	12.5	6.5	14.8	3	3
KHS 90-50	50	4	80	100	14.2	30.5	3	8.5
75	75	6	108	100	10.5	19	3	9.5
-100	100	8	128	100	9.9	42	3	12
KHS 100-50	50	4.4	79	110	14.2	30.5	3	14
-100	100	8.8	140	110	9.9	42	3	17
KHS 130-70	70	10	170	179	18.2	42.5	3	21
-100	100	15	270	188	17.8	48	3	24
-150	150	21	294	175	18.3	53.5	2.5	28
KHS 170-80	80	22	396	340	18.2	44.3	3	38
-150	150	41	574	340	18.3	53.5	2	48
KHS 190-100	100	40	720	500	17.8	48	2.5	52
-150	150	60	840	500	18.3	53.5	2	64
KHS 220-100	100	44	792	550	40.5	134	2.5	69
-150	150	66	924	550	41.8	131	2	76
KHS 250-100	100	60	1,080	750	38.5	111.2	2.5	130
-150	150	90	1,260	750	34.2	107.5	2	140
-200	200	120	1,560	750	33	105	2	150
-300	300	180	2,160	750	38	121.8	2	170
KHS 300-150	150	117	1,638	975	46	142	2	186
-250	250	180	2,340	1,125	45	151	1.5	206
KHS 340-200	200	200	2,600	1,250	51	162	1.5	275
-300	300	300	3,600	1,250	49	176	1.5	305
KHS 360-250	250	294	3,822	1,470	68	178	1.5	324
-400	400	470	4,700	1,470	64	182	1.5	376

At a glance

Stacker Crane Buffers - KCSC Series

Model	Stroke (mm) S	Max Energy /Cycle (kJ) E_T	Max Energy /Hour (kJ/h) E_TC	Max Shock Force (kN) F_S	Max Side Load Angle (°)	Weight (kg)
KCSC90-50	50	4	193	75	2.5	13
-100	100	7	395	75	2	14
-150	150	10	588	75	2	15
-200	200	13	784	75	2	16
-250	250	16	839	75	1	17
-300	300	20	940	75	1	18
-350	350	23	1,265	75	1	19
-400	400	21	1,150	67	0.5	20
-450	450	20	1,090	55	0.5	21
-500	500	19	1,060	47	0.5	22
-600	600	15	880	31	0.5	25
-700	700	13	610	24	0.5	33
-800	800	12	539	19	0.5	36
KCSC110-50	50	5	296	115	2.5	14
-100	100	10	568	115	2	16
-150	150	15	881	115	2	20
-200	200	20	934	115	2	22
-250	250	25	1,056	115	1	24
-300	300	29	1,186	115	1	26
-350	350	34	1,352	115	1	28
-400	400	39	1,517	115	0.5	30
-450	450	44	1,680	115	0.5	32
-500	500	49	1,845	115	0.5	34
-600	600	59	2,168	115	0.5	36
-700	700	69	2,485	115	0.5	42
-800	800	79	2,806	115	0.5	50
-900	900	88	3,130	115	0.5	52
-1000	1,000	73	3,483	92	0.5	58
-1200	1,200	60	2,758	63	0.5	65
-1400	1,400	41	1,917	37	0.5	75

At a glance

Stacker Crane Buffers - KCSC Series

Model	Stroke (mm) S	Max Energy / Cycle (kJ) E_T	Max Energy / Hour (kJ/h) E_TC	Max Shock Force (kN) F_S	Max Side Load Angle (°)	Weight (kg)
KCSC130-50	50	10	590	245	2	13
-75	75	15	659	245	1.5	15
-125	125	25	815	245	1.5	17
-200	200	39	1,110	245	1.5	21
-250	250	49	1,314	245	1	23
-300	300	58	1,512	245	0.5	26
-350	350	68	1,736	245	0.5	29
-400	400	78	1,934	245	0.5	32
-450	450	88	2,133	245	0.5	36
-500	500	97	2,329	245	0.5	42
-600	600	116	2,714	245	0.5	49
-700	700	136	3,102	245	0.5	56
-800	800	155	3,486	215	0.5	62
-900	900	167	3,785	181	0.5	69
-1000	1,000	117	3,824	147	0.5	80
-1200	1,200	103	4,722	107	0.5	102
-1400	1,400	73	2,851	66	0.3	107
-1500	1,500	66	2,438	55	0.3	110
KCSC200-50	50	16	943	370	2	90
-100	100	31	1,534	370	1.5	95
-150	150	47	1,756	370	1.5	100
-200	200	63	1,988	370	1	105
-250	250	79	2,210	370	0.5	110
-300	300	93	2,855	370	0.5	120
-400	400	126	3,304	370	0.5	130
-500	500	157	3,758	370	0.5	140
-600	600	188	4,211	370	0.5	150
-700	700	220	4,661	370	0.5	160
-800	800	251	5,114	370	0.5	170
-900	900	283	5,568	370	0.5	180
-1000	1,000	240	6,117	300	0.5	190
-1200	1,200	210	4,920	200	0.5	210

Model	Stroke (mm) S	Max Energy / Cycle (kJ) E_T	Max Energy / Hour (kJ/h) E_TC	Max Shock Force (kN) F_S	Max Side Load Angle (°)	Weight (kg)
KCSC215-100	100	48	1,804	560	2	87
-150	150	72	2,051	560	1.5	94
-200	200	96	2,290	560	1.5	101
-250	250	120	2,530	560	1	108
-300	300	143	2,775	560	0.5	114
-400	400	191	3,265	560	0.5	127
-500	500	239	4,234	560	0.5	158
-600	600	287	4,741	560	0.5	171
-700	700	334	5,209	560	0.5	185
-800	800	382	5,699	560	0.5	198
-1000	1,000	478	6,687	560	0.5	225
-1200	1,200	417	6,255	435	0.5	242
KCSC275-100	100	78	2,445	915	2	164
-150	150	117	2,766	915	1.5	175
-200	200	156	3,053	915	1.5	186
-250	250	194	3,373	915	1	196
-300	300	233	3,767	915	0.5	207
-400	400	311	4,303	915	0.5	228
-500	500	389	4,934	915	0.5	250
-600	600	467	6,186	915	0.5	309
-750	750	583	7,117	915	0.5	341
-900	900	700	8,048	915	0.5	373
-1050	1,050	816	8,970	915	0.5	405
-1200	1,200	790	8,061	827	0.5	438

At a glance

Visco-Elastic Buffer - KES Series

Model	Stroke (mm) S	Max Energy / Cycle (kJ) E_T	Dyn. Reaction Force (kN)		Impact Velocity (m/s)	Weight (kg)
			RDmin	RDmax	max	
KESM25-12	12	0.1	6	11	2	0.3
KESM35-22	22	0.4	14	27	4	0.7
KESM40-22	22	0.4	14	27	5	0.8
KESM50-35	35	1.5	28	60	5	1.9
KESM60-35	35	1.5	28	60	5	2
KESM75-45	45	3.5	45	100	5	5
KESM90-60	60	7	90	150	5	10.5
KESM110-80	80	14	130	230	5	17
KESE116-105	105	25	167	310	4	25
KESE142-130	130	50	260	500	4	37
KESE160-140	140	75	400	700	4	45
KESE180-160	160	100	470	820	4	73
KESE215-180	180	150	640	1100	4	117
KESS50-150	150	6	25	50	3	4.2
KESS75-150	150	12	66	100	3	11
KESS75-200	200	12	42	78	3	11
KESS90-200	200	25	95	150	3	20
KESS90-270	270	25	66	112	3	25
KESS110-275	275	50	118	230	3	40
KESS110-400	400	50	75	150	3	40
KESS110-400H	400	100	175	320	3	65
KESS110-600	600	100	85	230	3	65
KESS110-800	800	150	80	250	3	115
KESH130-400	400	100	190	310	3	63
KESH140-500	500	150	200	380	3	90
KESH140-400H	400	220	380	685	3	100
KESH155-650	650	250	270	490	3	135
KESH175-850	850	400	330	600	3	218
KESH200-1050	1,050	600	370	740	3	295
KESH220-1200	1,200	800	430	860	3	420
KESH230-1300	1,300	1,000	500	1,000	3	470

At a glance

Elasto-Fluid Heavy Duty Buffer - KVD Series

Model	Stroke (mm) S	Max Energy / Cycle (kJ)	Max. Dynamic Force (kN)	Preload (kN)	Weight (kg)
KVD55-50	50	3	76	4	3
KVD100-50	50	9	236	23	9
KVD100-100	100	18			11
KVD130-100	100	33	421	40	19
KVD130-150	150	50			20
KVD180-100	100	51	643	88	46
KVD180-200	200	102			50
KVD180-300	300	154			56

Rate Controls - KRC Series

Model	Stroke (mm) S	Max. Propelling Force (N)		Weight (g)
		Ext	Comp	
KRC30-50	50	3,000	3,000	310
-100	100	3,000	2,600	380
-150	150	3,000	2,100	450
-200	200	3,000	1,400	530
-250	250	3,000	800	600
KRC50-50	50	11,000	11,000	2,000
-100	100	11,000	11,000	2,500
-150	150	11,000	11,000	3,000
-200	200	11,000	11,000	3,300
-250	250	11,000	11,000	3,600
KRC70-50	50	20,500	20,500	1,700
-100	100	20,500	20,500	2,100
-150	150	20,500	20,500	2,400
-200	200	20,500	20,500	2,700
-250	250	20,500	20,500	3,000
-300	300	20,500	20,500	3,300
-350	350	20,500	20,500	3,700

At a glance

Hydro-Check - KHC Series

Model	Stroke (mm) S	Max Load Angle From Axis (°)	Speed Adjustment Range		Weight (g)
			Load Limits (N)	Feed Rate Limits (mm/s)	
KHC 24-15	15	1.2	100-2,500	0.2-30	385
-30	30	1			450
-60	60	0.5			635
-90	90	0.3			745
-120	120	0.2			885
KHC 31-40	40	1	450-3,500	0.2-30	1,040
-60	60	0.5			1,245
-100	100	0.3			1,655
KHC 38-60	60	0.5	1,500-5,000	0.3-30	2,490
-100	100	0.3			3,310

Gas Springs

KG Series

Model (Push Type)	Max Stroke (mm) S	Max Force (N)
KG 15	200	Below 300
KG 18	250	Below 600
KG 22	300	Below 900
KG 30	350	Below 1,200
KG 35	400	Below 2,000
KG 40	500	Below 3,000
KG 50	700	Below 5,000
KG 75	1,000	Below 8,000
KG 100	1,300	Below 12,000

KGP Series

Model (Pull Type)	Max Stroke (mm) S	Max Force (N)
KGP 22	300	Below 200
KGP 30	350	Below 900
KGP 35	400	Below 1,200
KGP 40	500	Below 1,500
KGP 50	700	Below 2,000
KGP 75	1,000	Below 3,000

KGL Series

Model (Free Lock Type)	Stroke (mm) S	Force (N)
KGL 28-50	50	100 - 1,300
-80	80	
-100	100	
-150	150	
-200	200	

CONTENTS

1. Description ---------- (21)
2. Shock Absorber : Structure & Principle of Shock Absorber ------- (22)
3. Shock Absorber Model Selection ---------- (24)
4. Shock Absorber How to Select Shock Absorber ---------- (27)
5. Shock Absorber Instruction Manual ---------- (35)
6. Shock Absorber KMA Series ---------- (40)
7. Shock Absorber KMS Series ---------- (53)
8. Shock Absorber KSA Series ---------- (66)
9. Shock Absorber KHA Series ---------- (75)
10. Oil Tank & Check Valve Series ---------- (86)
11. Hydraulic Buffer KHG Series ---------- (88)
12. Hydraulic Buffer KHS Series ---------- (100)
13. Stacker Crane Buffers KCSC Series ---------- (106)
14. Visco-Elastic Buffer KES Series ---------- (113)
15. Elasto-Fluid Heavy Duty Buffer KVD Series ---------- (122)
16. Rate Controls KRC Series ---------- (124)
17. Hydro Check KHC Series ---------- (128)
18. Gas Spring KG Series ---------- (132)
19. Gas Spring KGP Series ---------- (135)
20. Gas Spring KGL Series ---------- (137)

Shock Absorbers & Buffers

	KMA Series - Adjustable shock absorber with adjustment dial of 300 within 12 steps
	KMS Series - Self - Adjustable series with multiple orifice for soft stop of a broad range of impact mass
	KSA Series - High energy series for emergency stop as well permanent driven application
	KHA Series - Mid sized adjustable shock absorber for medium and heavy loads.
	KHG Series - For heavy duty application.2-step damping unit with special nitrogen gas chamber within the piston rod
	KHS Series - Small compact heavy duty buffer with customized orifices according application data
	KCSC Series - Used for stacker cranes or any crane application
	KES Series - Highest energy capacity and smallest installation space
	KRC Series - Speed controls with both sided or one sided adjustment of movement
	KHC Series (Hydro Check) - Enables precise speed adjustment of moving load
	Gas spring (KG, KGP) that uses Nitrogen gas has a general specific characters of spring, long stroke, small repulsive force, lifts big loads with small units, allows speed control in compression and tension and can be used in various application
	Free lock gas spring series have all merits of general Gas spring. KGL Series have a free lock function that operators can decide a stroke at the voluntary point where operators want to install.

Hydraulic Shock Absorbers

As mechanical parts of operating machinery such as automated assembling systems, conveyors and safty devices for machine tools strive to increase operation speed and precision, more often the results shows increased noise, vibration as well damage to the machinery. To avoid decreasing safty and machine reliability typical products are used include rubber bumper, springs, cylinder cushion and industrial shock absorber.

The adventage of using KOBA shock absorber :
Longer life cycle of machinery due to reduction of shock and vibration.
Higher operating speed - shock absorber control or gently stop moving parts
Safer operation of machinery due to protection of machinery and equipment by reliable and controlled deceleration

Shock Absorber Performance Comparison Chart.

Rubber & Spring	undesirable recoil effect. Most of absorbed energy is stored and returned to the load, producing rebound. Rubber bumper provide low resisting force which increases with the stroke.	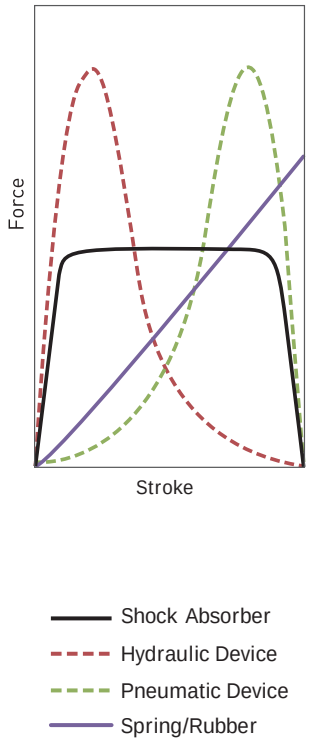
Hydraulic & Pneumatic Devices	Most cylinders are not capable of absorbing energy caused by the system. The remaining energy is transferred to the system and could cause shock and vibration.	
KOBA Shock Absorbers	Shock absorber provides a controlled reliable deceleration of moving loads by converting kinetic energy to thermal energy. Shock absorber offers the highest energy absorption	

Hydraulic Shock Absorber

1. Shock Absorber consists of Body, Bumper Head, Piston Rod, Adjustment Dial, Lock Nut.
2. Body available with several thread options.
3. Bumper Head with integrated different cap material for noise reduction.
4. Piston Rod : Hard chrome plated or stainless steel
5. Adjustment Dial for stepless adjustment of damping strength.
6. Lock Nut for easy mounting

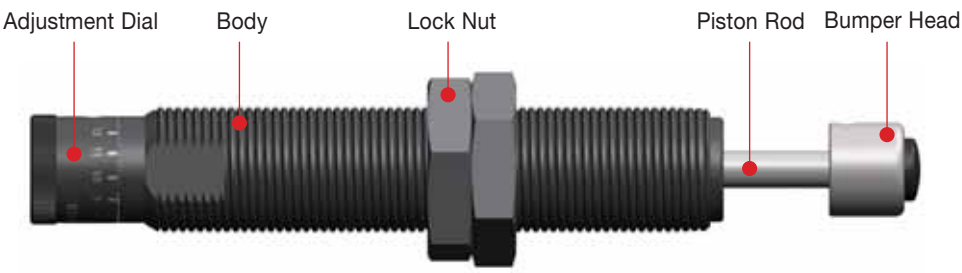

Shock Absorber Internal structure

Shock Absorber consists of Piston, Check Valve, Accumulator, Inner tube.

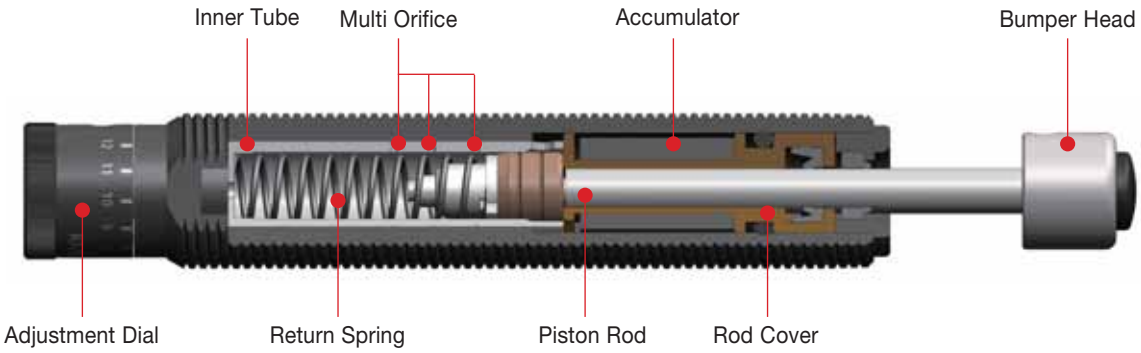

Principal of Energy Absorption

Oil is forced out of the high pressure shock tube chamber through the orifice, creating an internal pressure allowing smooth controlled deceleration of moving mass. During this process kinetic energy will be transfered to thermal energy

Orifices Feature

Single Orifice

Single Orifice Type - called Dashpot structure offers progressive damping characteristic.

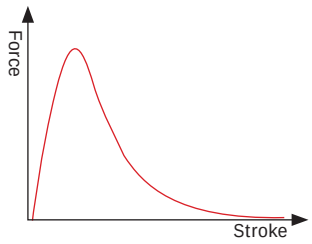

Multiple Orifices

▪ Adjustable Type

Pressure oil flow controled through several orifice offer linear deceleration by providing a constant shock force over the entire stroke - most efficiency.

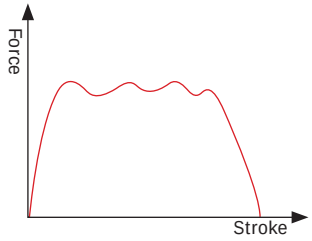

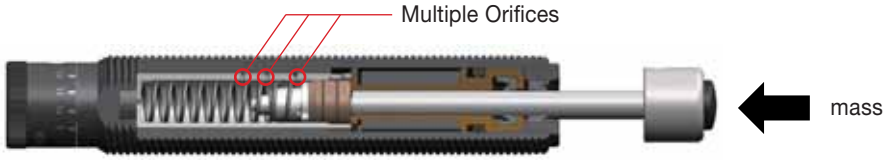

▪ Self Adjustable

Picture shows characteristic of damping (A1 high velocity - low propelling force : B1 low velocity - high propelling force)

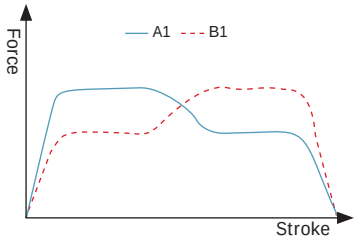

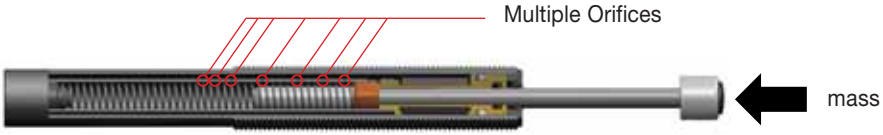

▪ Metering Orifice

This is one kind of the non adjustable Multiple orifice types. This type has quick response and good efficiency for short stroke because the changing of orifice area is continuous.

Short stroke means under 25mm (but KMS14-20 is not including in this type)

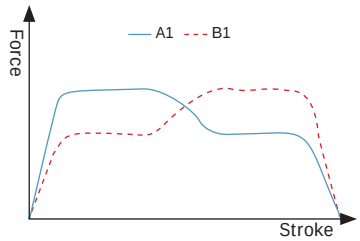

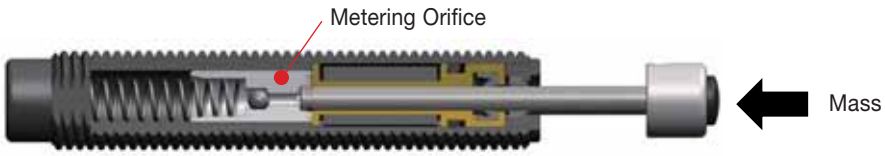

Shock Absorber Selection

1. Indentification of following parameters :

1.1 Load weight (kg) 1.2 Impact velocity : V(m/s) 1.3 Propelling force : F(N) 1.4 Cycles / hour : C

2. Steps to select the right Model

2.1 Check the conditions

- Check how the object will hit the Shock Absorber :
  Horizontal motion, Vertical motion, Inclined motion, or rotary motion. With or without Propelling force
- Check the maximum Weight
- Check the Velocity of moving loads : if the Velocity is not determined due to cylinder collision or something like that, in this case, the velocity is assumed as twice of average velocity.

2.2 Calculate the Kinetic energy (Ek)

- With the reference of Formulae described in catalog, Calculate the Kinetic energy. $E_K = (W \times V^2) / 2$

2.3 Check the Propelling Force

- Check the Propelling Force F(N) and if yes, with the reference of Formulae described in catalog, find the propelling Force. With this, select the temporary Model compared Engineering Data in catalog.

2.4 Select the Stroke of Shock Absorber.

- With the temporary model, select the Stroke of Shock Absorber.

2.5 Find Propelling Energy

- Find Propelling Energy with the reference of Formulae described in catalog. $E_W = F \times S$.

2.6 Find Total Energy per cycle E_T and select the Model of Shock Absorber

- $E_T = E_K + E_W$

Hydraulic Shock Absorbers

2.7 Check the total Energy per hour E_TC.

- Find the Total Energy per hour with cycle per hour and Total Energy per cycle and check it within the range of selected model's in Engineering Data in Catalog. $E_TC \geq E_T \times C$

2.8 Check the Effective Weight (We)

- In the case of collision with Propelling Force, Check the Effective Weight (We).
  Especially you should check it in the case of low velocity (under 0.3m/s),
  $W_e = (2 \times E_T) / V^2$ [The Calculated value of W_e should be within the range decsribed in Engineering Data in catalog.]
  In the case of collision without propelling force, the Effective weight is same as weight of moving loads(We =W)
- Even if the moving loads is same Weight and Velocity, the Effective weights are very different depending on the propelling force and the installation location of Shock Absorber so you should check the Effective weight always.

Ⓐ Without Propelling force

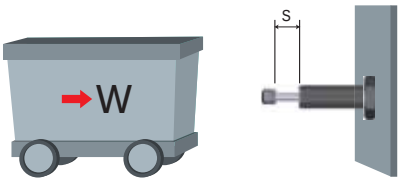

W=50/kg V=2m/s
E_K=100Nm E_W=0
E_T=100Nm W_e=50kg

Ⓑ With Propelling force

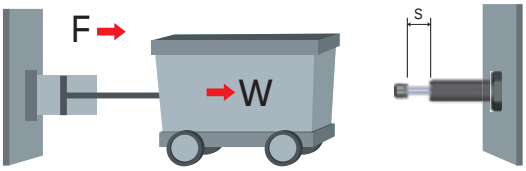

W=50kg V=2m/s Stroke=0.1m
E_K=100Nm Inner Diameter of Cylinder=80mm
Pressure=5bar F=2512N E_W=251.2Nm
E_T=351.2Nm W_e=175.6kg

Ⓒ Without Propelling force

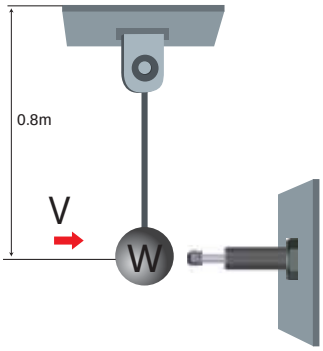

W=20kg V=2m/s E_K=40Nm
E_W=0Nm E_T=40Nm W_e=20kg

Ⓓ With Propelling force

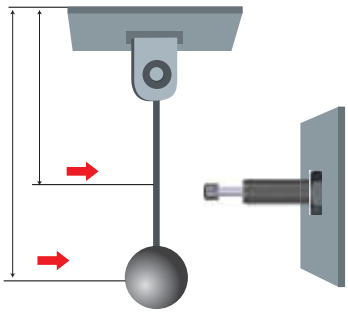

W=20kg V=2m/s Stroke=0.1m
V_D=1.25m/s E_K=40Nm E_W=31.36Nm
E_T=71.36Nm W_e=91.34kg

2.9 Operation temperature

- standard Operation temperature within the range of : -10 ~ 80℃
- for specific or different ranges please contact out technical customer support team.

2.10 Remark

- In any case please check our website www.kobapage.com for easy selection or contact our technical customer support.

Selection Flow Chart

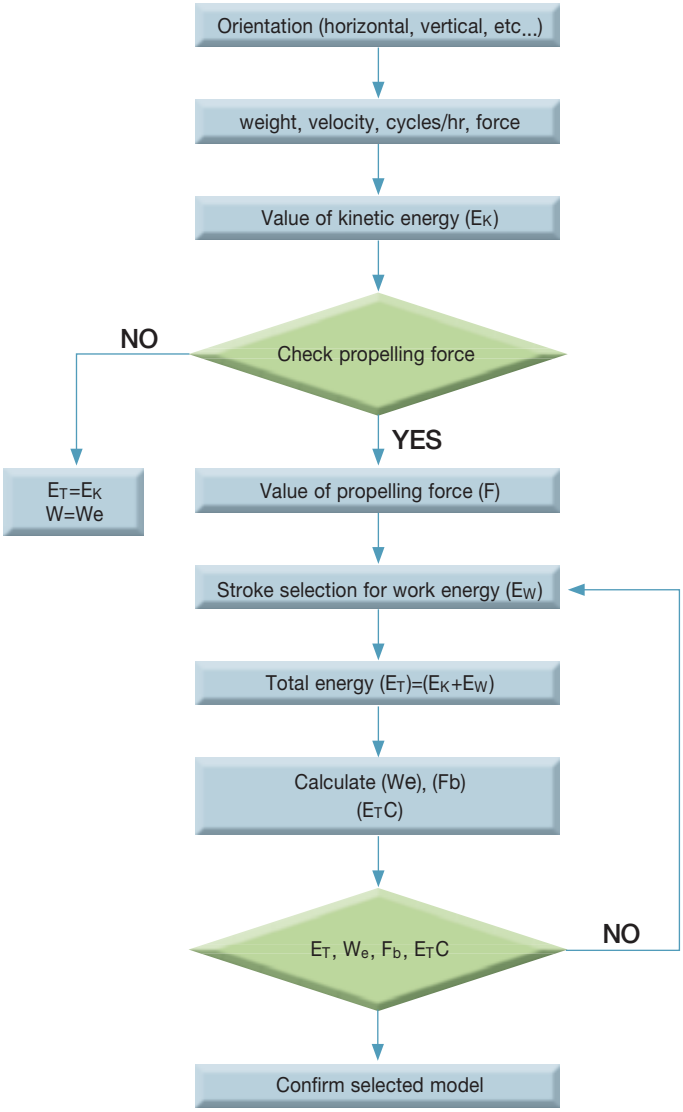

Formular for Shock Absorber

1. Overview Symbol

Symbol	Unit	Description	Symbol	Unit	Description
E_K	Nm	Kinetic energy	d	mm	Cylinder rod diameter
E_W	Nm	Work energy	D	mm	Cylinder bore diameter
E_T	Nm	Total energy	g	m/s^2	Acceleration
E_TC	Nm/h	Total energy/hour	T	Nm	Propelling torque
F_S	N	Shock Absorber force	H	m	Drop height
F	N	Propelling force	W	kg	Weight
W_e	kg	Effective mass	p	bar	Operation pressure
S	mm	Stroke	ω	rad/s	Angular velocity
C	Cycle/h	Cycle / hour	α	° (degree)	Angle of incline
V	m/s	Impact velocity	I	Nm/s^2	Moment of inertia
V_e	m/s	Actual velocity	μ	μ	Coefficient of friction
P	kW	Motor power	a	m/s^2	Deceleration

▪ 1kgf = 9.81N , 1Nm = 1J , 1MPa = 10bar = 10.2kg/cm^2 , 1g = 9.8m/s^2

Hydraulic Shock Absorbers

2. Formulae and Calculation

Description			Formular
kinetic energy (E_K)	General inertial moving		$E_K = (W \times V^2) / 2$
	Vertical free falling		$E_K = W \times g \times H$
Work energy (E_W)			$E_W = F \times S$
Total energy (E_T)			$E_T = E_K + E_W$
Total energy / hour (E_TC)			$E_TC = E_T \times C$
max Shock Absorber force (F_S) (consider safty factor 20%)			$F_S = E_T / (S \times 0.8)$
propelling Force (F)	Motor power propelling force		$F = (3000 \times kW) / V$
	Cylinder force (horizontal expansion)		$F = 0.0785 \times D^2 \times P$
	Cylinder force (horizontal compression)		$F = 0.0785 \times (D^2-d^2) \times P$
	Cylinder force (F1 : propelling force)	vertical down	$F = F1 + (W \times g)$
		vertical up	$F = F1 - (W \times g)$
	Free falling		$F = W \times g$
	Friction conveyor belt (0.1~0.2)		$F = W \times g \times \mu$
Effective mass (We)			$W_e = (2 \times E_T) / V^2$ (for inertial moving $W_e = W$)
Impact velocity	vertical free falling		$V = \sqrt{2 \times g \times H}$
	Accleration (Ex:air cylinder)		$V = \frac{2D}{t}$ (D=Distance)
	Without acceleration (Ex:hydraulic cylinder, motor)		$V = \frac{D}{t}$ (D=Distance)
Deceleration (a)			$a = V^2 / (2 \times S)$
Stopping time (t)			$t = \frac{2 \times S}{0.8 \times V}$

▪ 1kgf = 9.81N , 1Nm = 1J , 1MPa = 10bar = 10.2kg/cm^2 , 1g = 9.8m/s^2

KOBA Shock Absorber Calculation

A. Mass free fall

- W=1200kg
- H=0.5m
- C=250/h

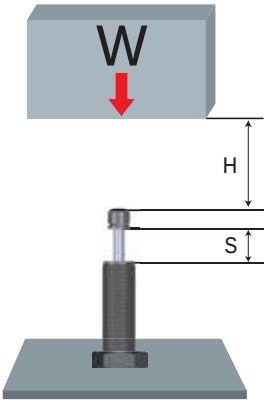

$E_K = W \cdot g \cdot H = 1200 \times 9.8 \times 0.5 = 5880 Nm$

Model (Temporary): *KHA* 115 − 150 (*Stroke*: 150)

$E_W = W \cdot g \cdot S = 1200 \times 9.8 \times 0.15 = 1765 Nm$

$E_T = E_K + E_W = 5880 + 1765 = 7645 Nm$

$E_T C = E_T \cdot C = 7645 \times 250 = 1911250 Nm/h$

$V = \sqrt{2 \cdot g \cdot H} = \sqrt{2 \times 9.8 \times 0.5} = 3.1 m/sec$

$W_e = \frac{2 \cdot E_T}{V^2} = \frac{2 \times 7645}{3.1^2} = 1591 kg$

Model : KHA 115 − 150

B. Horizontal mass without propelling force

- W=500kg
- V=1.5m/s
- C=200/h

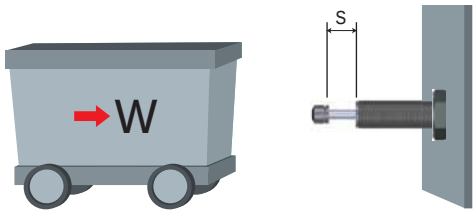

$E_K = \frac{W \cdot V^2}{2} = \frac{500 \times 1.5^2}{2} = 562.5 Nm$

Model (Temporary): *KHA* 42-75 (*Stroke*: 75)

$E_W = 0$

$E_T = E_K + E_W = 562.5 + 0 = 562.5 Nm$

$E_T C = E_T \cdot C = 562.5 \times 200 = 112500 Nm/hr$

$W_e = \frac{2 \cdot E_T}{V^2} = \frac{2 \times 562.5}{1.5^2} = 500 kg$

Model : KHA 42 − 75

Hydraulic Shock Absorbers

KOBA Shock Absorber Calculation

C. Horizontal moving mass

- W=800kg
- P=5bar
- V=1.8m/s
- C=200/h
- d=80mm

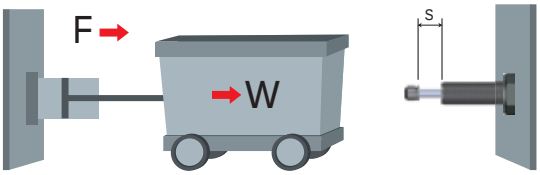

$$E_K = \frac{W \cdot V^2}{2} = \frac{800 \times 1.8^2}{2} = 1296Nm$$

$$F = 0.0785 \cdot d^2 \cdot P = 0.0785 \times 80^2 \times 5 = 2512N$$

Model (Temporary) : *KHA* 64 − 100(*Stroke*: 100)

$$E_W = F \cdot S = 2512 \times 0.1 = 251.2Nm$$

$$E_T = E_K + E_W = 1296 + 251.2 = 1547.2Nm$$

$$E_T C = E_T \cdot C = 1547.2 \times 200 = 309440Nm/h$$

$$W_e = \frac{2 \cdot E_T}{V^2} = \frac{2 \times 1547.2}{1.8^2} = 955.1kg$$

Model : *KHA* 64 − 100 *or* *KHA* 85 − 50

D. Horizontal mass with out propelling force

- W=1200kg
- V=1.6m/s
- P=1kW
- C=130/h

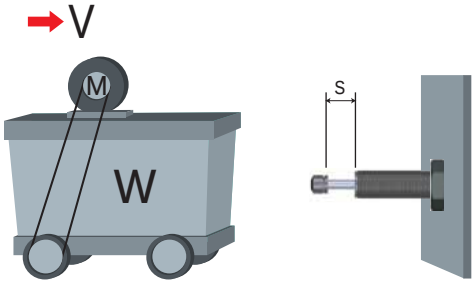

$$E_K = \frac{W \cdot V^2}{2} = \frac{1200 \times 1.6^2}{2} = 1536Nm$$

$$F = \frac{3000 \cdot P}{V} = \frac{3000 \times 1}{1.6} = 1875N$$

Model (Temporary) : *KHA* 64 - 100(*Stroke* : 100)

$$E_W = F \cdot S = 1875 \times 0.1 = 187.5Nm$$

$$E_T = E_K + E_W = 1536 + 187.5 = 1723.5Nm$$

$$E_T C = E_T \cdot C = 1723.5 \times 130 = 224055Nm/h$$

$$W_e = \frac{2 \cdot E_T}{V^2} = \frac{2 \times 1723.5}{1.6^2} = 1346.5kg$$

Model: *KHA* 64 - 100 *or* *KHA* 85 − 50

E. Driven Roller Free-Flow System

- W=50kg
- V=1.5m/s
- μ=0.3
- C=100/h

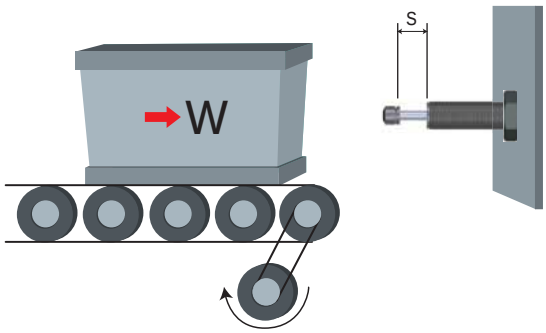

$$E_K = \frac{W \cdot V^2}{2} = \frac{50 \times 1.5^2}{2} = 56.3Nm$$

$$F = W \cdot g \cdot \mu = 50 \times 9.8 \times 0.3 = 147N$$

Model (Temporary): *KMA* 25 − 25(*Stroke*: 25)

$$E_W = F \cdot S = 147 \times 0.025 = 3.7Nm$$

$$E_T = E_K + E_W = 56.3 + 3.7 = 60Nm$$

$$E_TC = E_T \cdot C = 60 \times 100 = 6000Nm/h$$

$$W_e = \frac{2 \cdot E_T}{V^2} = \frac{2 \times 60}{1.5^2} = 53.3kg$$

Model: *KMA* 25 − 25

F. Free moving load and inclined plane

- W=60kg
- H=0.3m
- α=25°
- C=200/h

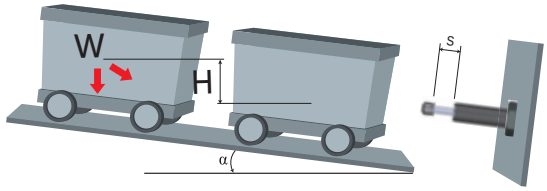

$$E_K = W \cdot g \cdot H = 60 \times 9.8 \times 0.3 = 176.4Nm$$

$$F = W \cdot g \cdot \sin\alpha = 60 \times 9.8 \times 0.42 = 247N$$

Model (Temporary): *KMA* 36 − 50(*Stroke*: 50)

$$E_W = F \cdot S = 247 \times 0.05 = 12.4Nm$$

$$E_T = E_K + E_W = 176.4 + 12.4 = 188.8Nm$$

$$E_TC = E_T \cdot C = 188.8 \times 200 = 37760Nm/h$$

$$V = \sqrt{2 \cdot g \cdot H} = \sqrt{2 \times 9.8 \times 0.3} = 2.4m/s$$

$$We = \frac{2 \cdot E_T}{V^2} = \frac{2 \times 188.8}{2.4^2} = 65.6kg$$

Model: *KMA* 36 − 50 *or* *KHA* 42 − 25

KOBA Shock Absorber Calculation

G. Mass vertical with propelling force down

- W=500kg
- d=100mm
- P=5bar
- V=1m/s
- C=250/h

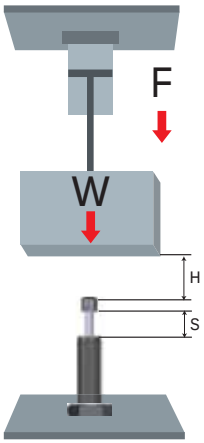

$$E_K = \frac{W \cdot V^2}{2} = \frac{500 \times 1^2}{2} = 250\,Nm$$

$$F = 0.0785 \cdot d^2 \cdot P + W \cdot g$$

$$= 0.0785 \times 100^2 \times 5 + 500 \times 9.8 = 8825N$$

$$Model\ (Temporary): KHA\ 64 - 50\ (Stroke: 50)$$

$$E_W = F \cdot S = 8825 \times 0.05 = 441.3Nm$$

$$E_T = E_K + E_W = 250 + 441.3 = 691.3Nm$$

$$E_TC = E_T \cdot C = 691.3 \times 250 = 172825Nm/h$$

$$We = \frac{2 \cdot E_T}{V^2} = \frac{2 \times 691.3}{1^2} = 1382.6\,kg$$

$$Model: KHA\ 64 - 50$$

H. Mass vertical with propelling force up

- W=100kg
- d=125mm
- P=5bar
- V=1.6m/s
- C=200/h

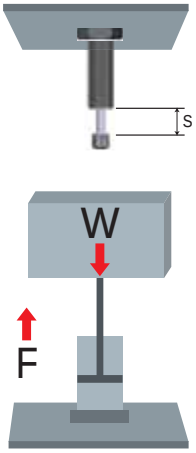

$$E_K = \frac{W \cdot V^2}{2} = \frac{100 \times 1.6^2}{2} = 128Nm$$

$$F = 0.0785 \cdot d^2 \cdot P - W \cdot g$$

$$= 0.0785 \times 125^2 \times 5 - 100 \times 9.8 = 5152.8N$$

$$Model\ (Temporary): KHA\ 42 - 50 (Stroke: 50)$$

$$E_W = F \cdot S = 5152.8 \times 0.05 = 257.6Nm$$

$$E_T = E_K + E_W = 128 + 257.6 = 385.6Nm$$

$$E_TC = E_T \cdot C = 385.6 \times 200 = 77120\,Nm/h$$

$$We = \frac{2 \cdot E_T}{V^2} = \frac{2 \times 385.6}{1.6^2} = 301.25kg$$

$$Model: KHA\ 42 - 50$$

I. Mass vertical

- W=500kg
- V_m=2m/s
- K=0.8m
- C=200/h
- (Rs) =0.6m

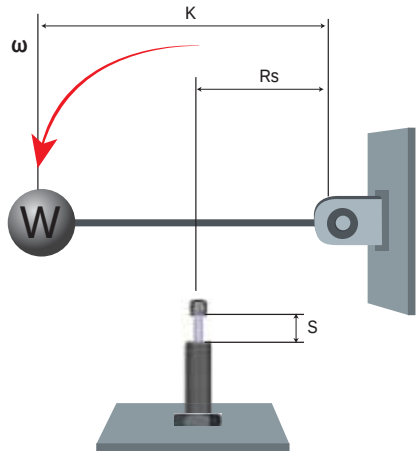

$$I\,(Moment\ of\ Inertia) = W \cdot K^2 = 500 \times 0.8^2 = 320 Nm/s^2$$

$$\omega = \frac{V}{K} = \frac{2}{0.8} = 2.5 rad/s$$

$$E_K = \frac{I \cdot \omega^2}{2} = \frac{320 \times 2.5^2}{2} = 1000 Nm$$

$$F = \frac{W \cdot g \cdot K}{Rs} = \frac{500 \times 9.8 \times 0.8}{0.6} = 6533.3 N$$

$Model\ (Temporary): KHA\ 85 - 50 (Stroke: 50)$

$$E_W = F \cdot S = 6533.3 \times 0.05 = 326.7 Nm$$

$$E_T = E_K + E_W = 1000 + 326.7 = 1326.7 Nm$$

$$E_T C = E_T \cdot C = 1326.7 \times 200 = 265340 Nm/h$$

$$V = Rs \cdot \omega = 0.6 \times 2.5 = 1.5 m/s\ (at\ shock\ Absorber)$$

$$We = \frac{2 \cdot E_T}{V^2} = \frac{2 \times 1326.7}{1.5^2} = 1179.3 kg$$

$Model: KHA\ 85 - 50$

J. Swing arm with propelling force

- P=5bar
- W=600kg
- ω=3rad/s
- K=0.6m
- (Rs) =0.8m
- d=80mm
- r=0.6m
- C=150/h

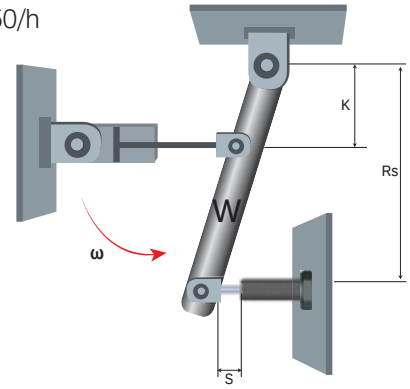

$$I\,(Moment\ of\ Inertia) = W \cdot K^2 = 600 \times 0.6^2 = 216 Nm/s^2$$

$$E_K = \frac{I \cdot \omega^2}{2} = \frac{216 \times 3.0^2}{2} = 972 Nm$$

$$F = \frac{0.0785\ d^2 \cdot P \cdot K}{Rs} = \frac{0.0785 \times 80^2 \times 5 \times 0.6}{0.8} = 1884 N$$

$Model\ (Temporary): KHA\ 64 - 50 (Stroke: 50)$

$$E_W = F \cdot S = 1884 \times 0.05 = 94.2 Nm$$

$$E_T = E_K + E_W = 972 + 94.2 = 1066.2 Nm$$

$$E_T C = E_T \cdot C = 1066.2 \times 150 = 159930 Nm/h$$

$$V = Rs \cdot \omega = 0.8 \times 3 = 2.4 m/s\ (at\ shock\ Absorber)$$

$$W_e = \frac{2 \cdot E_T}{V^2} = \frac{2 \times 1066.2}{2.4^2} = 370.2 kg$$

$Model: KHA\ 64 - 50$

Hydraulic Shock Absorbers

KOBA Shock Absorber

K. Horizontal rotating load

- W=50kg
- ω=1.5rad/s
- C=140/h
- K=0.8m
- (Rs) =0.6m

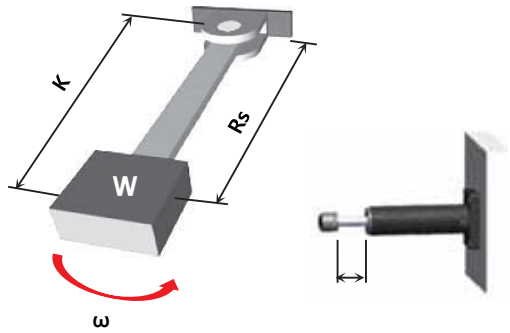

I (Moment of Inertia) $= W \cdot K^2 = 50 \times 0.8^2 = 32 Nm/s^2$

$$E_K = \frac{I \cdot \omega^2}{2} = \frac{32 \times 1.5^2}{2} = 36 Nm$$

Model (Temporary) : KMA 25 − 25(Stroke: 25)

$E_W = 0$

$E_T = E_K + E_W = 36 + 0 = 36 Nm$

$E_T C = E_T \cdot C = 36 \times 140 = 5040 Nm/h$

$V = Rs \cdot \omega = 0.6 \times 1.5 = 0.9 m/s$ (at shock Absorber)

$$W_e = \frac{2 \cdot E_T}{V^2} = \frac{2 \times 36}{0.9^2} = 88.9 kg$$

Model : KMA 25 − 25

L. Horizontal rotating with torque

- W=120kg
- ω=2.0rad/s
- C=160/h
- K=0.9m
- T=130Nm
- (Rs) =0.6m

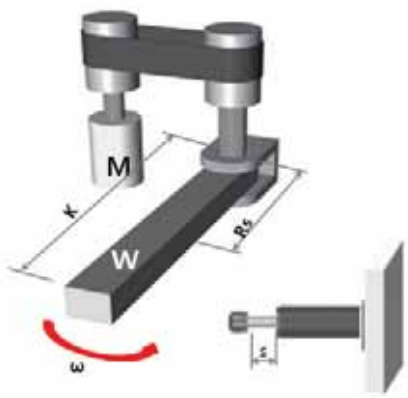

I (Moment of Inertia) $= W \cdot K^2 = 120 \times 0.9^2 = 97.2 Nm/s^2$

$$E_K = \frac{I \cdot \omega^2}{2} = \frac{97.2 \times 2.0^2}{2} = 194.4 Nm$$

$$F = \frac{T}{Rs} = \frac{130}{0.6} = 217 N$$

Model (Temporary) : KMA 36 − 50(Stroke: 50)

$E_W = F \cdot S = 217 \times 0.05 = 10.9 Nm$

$E_T = E_K + E_W = 194.4 + 10.9 = 205.3 Nm$

$E_T C = E_T \cdot C = 205.3 \times 160 = 32848 Nm/h$

$V = Rs \cdot \omega = 0.6 \times 2.0 = 1.2 m/s$

$$W_e = \frac{2 \cdot E_T}{V^2} = \frac{2 \times 205.3}{1.2^2} = 285.1 kg$$

Model : KMA 36 − 50 or KHA 42−25

safety Note

1. SHOCK ABSORBER

KOBA Shock Absorber has been developped for million cycles.
To assure long life cycle please be aware of the following regulations

1-1 Ensure correct energy capacity before operation of shock Absorber.

1-2 Do not paint or weld to the body of Shock Absorber.

1-3 Piston Rod not to be marked or painted. (Shock Absorber can fail by oil leackage.)

1-4 Adjustment Dial knob is preset to “0” by factory. Once achieved the correct damping strength tighten the lock screw

1-5 Be aware of to keep shock aborber away from fire due to filled up with oil there is a risk to ignite.

1-6 Always check strength of installation site before usage and avoid to install shock absorber at weak site.

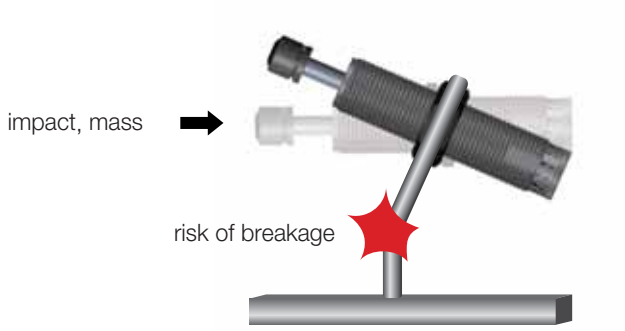

1-7 Refer to below table of proper lock nut installation tightening torque.

Shock Absorber Installation Torque.

Thread (mm)	M8x1.0	M10x1.0	M12x1.0	M14x1.0 / M14x1.5	M16x1.5	M20x1.5	M25x1.5 / M25x2.0	M27x1.5 / M27x2.0 / M27x3.0	M30x1.5	M36x1.5	M42x1.5
Nut 고정 Torque (Nm)	3.9	7.8	7.8	9.8	14.7	29.4	49	58.8	78.4	98	392

1-8 Protect the Shock absorber from dust, acids, steam, solvents, cutting fluids and weld flash.

1-9 Always check the operation temperature of shock absorber to get best performance (-10℃ to + 80℃).

Hydraulic Shock Absorbers

1-10 Impact mass should be perpendicular to the axis of shock absorber. In case of an side load impact especlally angle of deviation over 1°, it is betler to use an side load adapter. Otherwise failures can be occurred due to abrasion of inner sealings

1-11 Check the operating temperature range of Shock Absorber (-10℃~80℃) to get best performance.
If you need to use Shock Absorber in other temperature exceed standard operating temperature, Please contact us.

1-12 Shield the Shock Absorber to protect it from foreign material such as dust, acids, steam, solvents, cutting fluids, weld flash, and dust.

1-13 Adjusting Type of Shock Absorber is designed to get suitable resistance force according to impact velocity by controlling the area of orifice. Refer to below Adjustment Dial of KMA series, KSA Series and KHA Series.
Lock the set screw after adjustment.

KMA & KSA & KHA Series Adjustment Dial

KMA Series	KSA Series	KHA Series
Secure Screw	Secure Screw	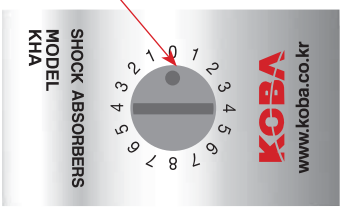 Scale and Lock Screw

1-14 Mounting the clamp Flange

During locking the lock slot will be clamped to secure the positioning.

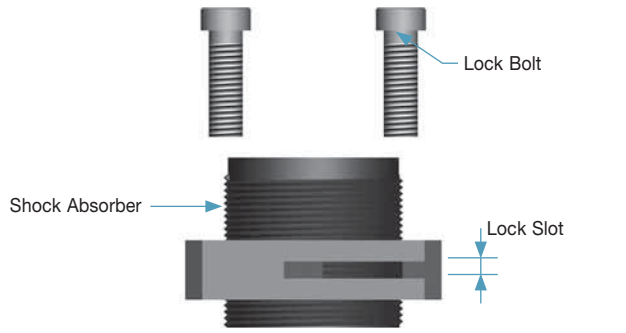

Initial situation

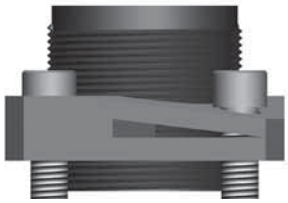

Correct Installation

1-15 Precaution - in case of rotation

Below picture shows instsllation of the shock absorber with and without side load adapter.

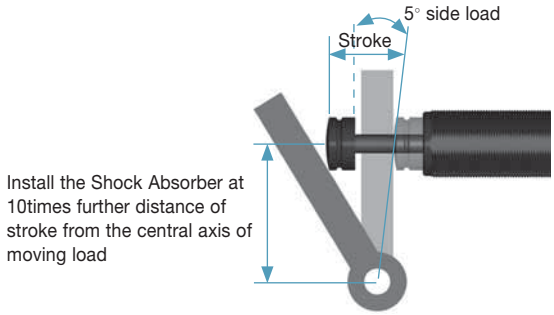

Rotating Movement

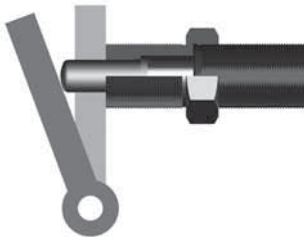

Side Load Adapter Instsllation

2. General Checking

2-1 Regular Checking

1) Check the below point regularly.

It is impossible to disassemble and repair the shock absorber so change the shock absorber when it is broken.

2) Checking Point

- Condition of Lock Nut fastened
- Condition of Piston Rod (Damage or Scratch)
- Checking the Stroke
- Outer Appearance of shock absorber
- Oil Leakage
- Noise on operation

2-2 Trouble and Solution

Trouble	Cause	Solution
Lock Nut is not fastened tightly.	Lack of Fixing Torque	Fasten the Nut or Bolt tightly.
	Vibration of machine	Check the Vibration of machine and adjust it
Not Suitable Shock absorption	The required Energy is over the Capacity of Shock absorber.	Change the Shock Absorber with higher capacity.
	The adjustable dial step is not suitable	Adjust the dial no. to higher no.
	Stop the stroke by stopper	Adjust the stopper location to use long stroke.
	The shock absorber is not installed linear.	Install the shock absorber as linear.
	The moving load is hit the shock absorber over 1 degree.	
	There is vibration in moving load.	Install the guide to remove the vibration.
	Use the body of Shock Absorber as Stopper.	Install the Stop Collar or other Stopper.
	Ambient temperature is too high.	Change the Shock Absorber to the one for high temperature.
	Damaged seal by other material on the Piston Rod .	Clean the piston rod and protect it from the dust.
	The rotating moving load is impacted direct to shock absorber.	install the protection object to prevent from the direct impact to shock absorber.
	The lifespan of shock absorber is over.	Change the Shock Absorber to new one
OIL Leakage	Damaged seal by other material on the Piston Rod.	Clean the piston rod and protect it from the dust.
	Ambient temperature is too low.	Warm the Shock Absorber as temp, over -10℃ or change it to shock absorber for low temperature.
	The lifespan of shock absorber is over.	Change the Shock Absorber to new one
Rod is not returned.	The shock absorber is not installed linear.	Install the shock absorber as linear.
	The moving load is hit the shock absorber over 1 degree	
	There is vibration in moving load.	Install the guide to remove the vibration.
	Use the body of Shock Absorber as Stopper.	Install the Stop Collar or other Stopper.
	Ambient temperature is too low.	Warm the Shock Absorber as temp, over -10℃ or change it to shock absorber for low temperature.
	The lifespan of shock absorber is over.	Change the Shock Absorber to new one

Hydraulic Shock Absorbers

KMA Series

KHA Series

KSA Series

KMS Series

K M A Series

KOBA
Best Energy Absorption

KMA - the adjustable industrial shock absorber for a broad range of application

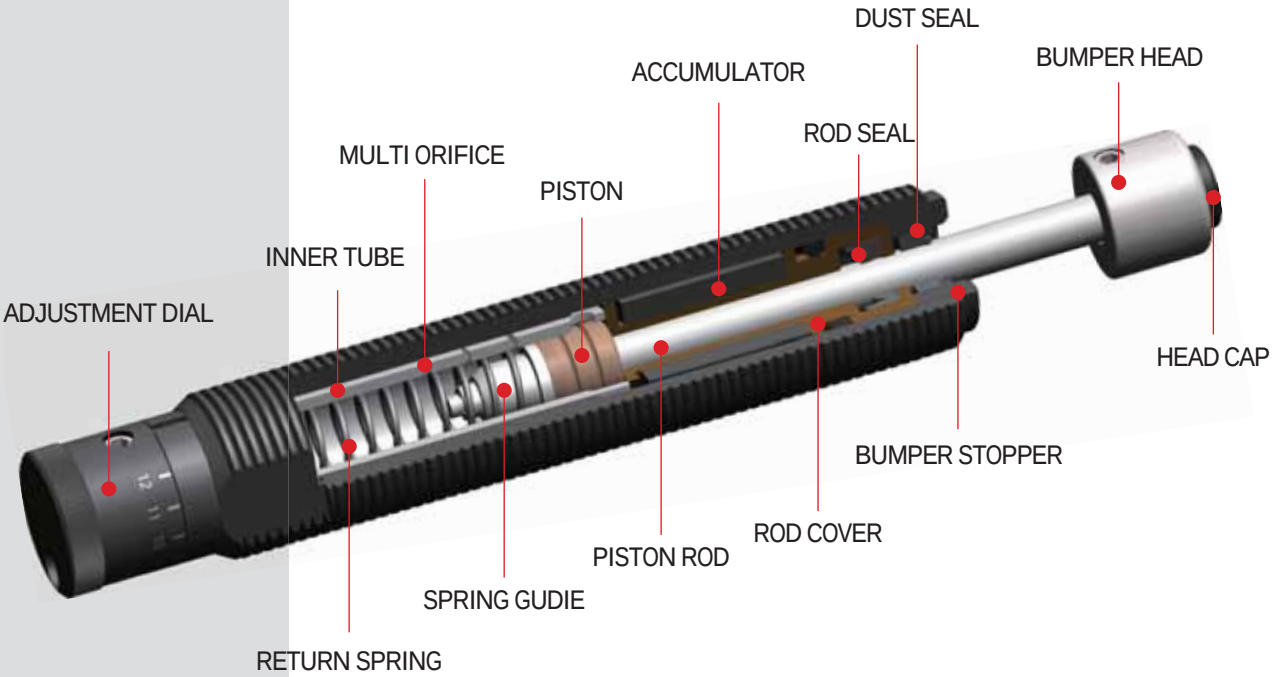

Properties

- KMA is the adjustable series to control damping force according imapct velocity by 12 steps.
- KMA series offer highest energy capacity and a wide range of effective Weight.
- Body has been developed as compact unit to avoid the Bottom Out problem.
- Fully threaded Body for highest mounting flexibility and improved thermal energy dissipation to the atmosphere.
- The hardened stainless steel piston Rod as well special treatment of the piston offers high life cycle rate.
- Several options of bumper head material - steel, black standard PU, green soft PU
- Impact velocity : 0.3~5.0m/s or for - LV(low velocity) models : 0.08~1.3m/s
- Standard temperature range -10~80 ℃
- Option -40~120 ℃(special seal, special oil)

KMA Series Ordering Information

KMA 14 - 12 B N LV - SC

- SC: 〈 Accessory Series 〉
  - SC : Stop Collar
  - RF : Rectangular Flange
  - SL : Side Load Adaptor
  - CM : Clamp Mount
- LV: impact velocity
  LV : low
- N: surface : standard black
  N : nickel plated
- B: Bumper Head
  S : steel cap
  B : black cap
  G : green - soft cap
  for KMA10series only
  Bumper Head
  B: standard black cap
- 12: Stroke
- 14: Body Thread Size
- KMA: KM: Series
  A: Adjustable

Accessory Series Charts

Accessories	Side Load Adapter	Stop Collar	Rectangular Flange	Clamp Mount
Symbols / Model	SL	SC	RF	CM
KMA 10-07	●	●		●
KMA 12-14	●	●		●
KMA 14-12	●	●		●
KMA 16-12	●	●		●
KMA 20-16	●	●		●
KMA 25-25	●	●		●
KMA 27-25	●	●		●
-40		●		●
KMA 30-35	●	●		●
KMA33-25	●	●	●	●
-50		●	●	●
KMA 36-25	●	●	●	●
-50		●	●	●

KMA 10 - 07(B)

Engineering Data

Model	Stroke (mm) S	Max.Energy / Cycle (Nm) E_T	Max.Energy /Hour (Nm/h) E_TC	Effective Weight (kg) We	Recoil Force (N)		Weight (g)
					Ext	Comp	
KMA10-07(B)	7	5.5	15,000	1-123	2.4	5.4	21

(unit : mm)

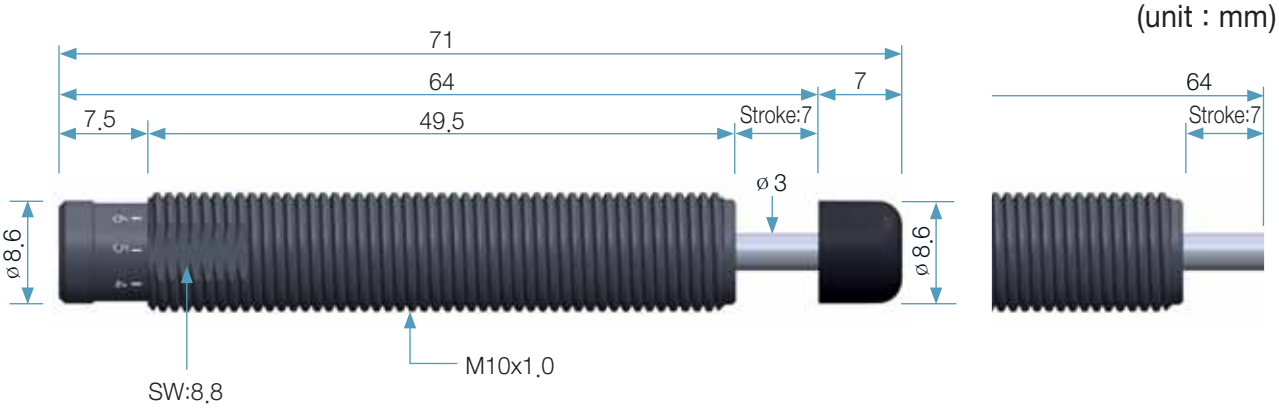

Accessory (unit : mm)

Stop Collar

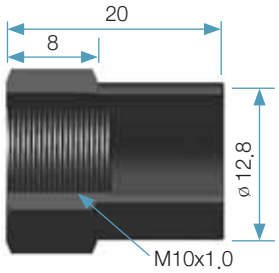

SC10

Side Load Adapter

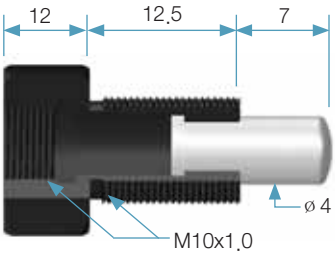

SL1007

Lock Nut

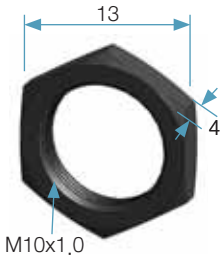

LN10

Clamp Mount

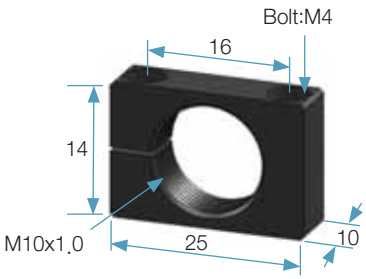

CM10

Adjustment Diagram

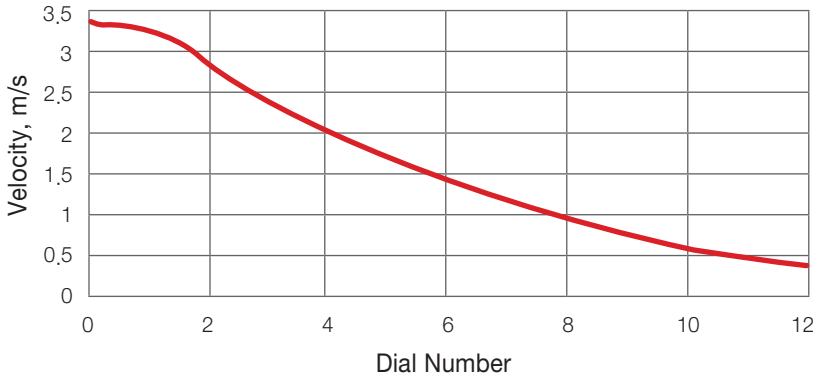

KMA 12 - 14(B)

Engineering Data

Model	Stroke (mm) S	Max.Energy / Cycle (Nm) E_T	Max.Energy /Hour (Nm/h) E_TC	Effective Weight (kg) We	Recoil Force (N)		Weight (g)
					Ext	Comp	
KMA12-14(B)	14	21.5	35,000	4-477	3.7	9.6	33

(unit : mm)

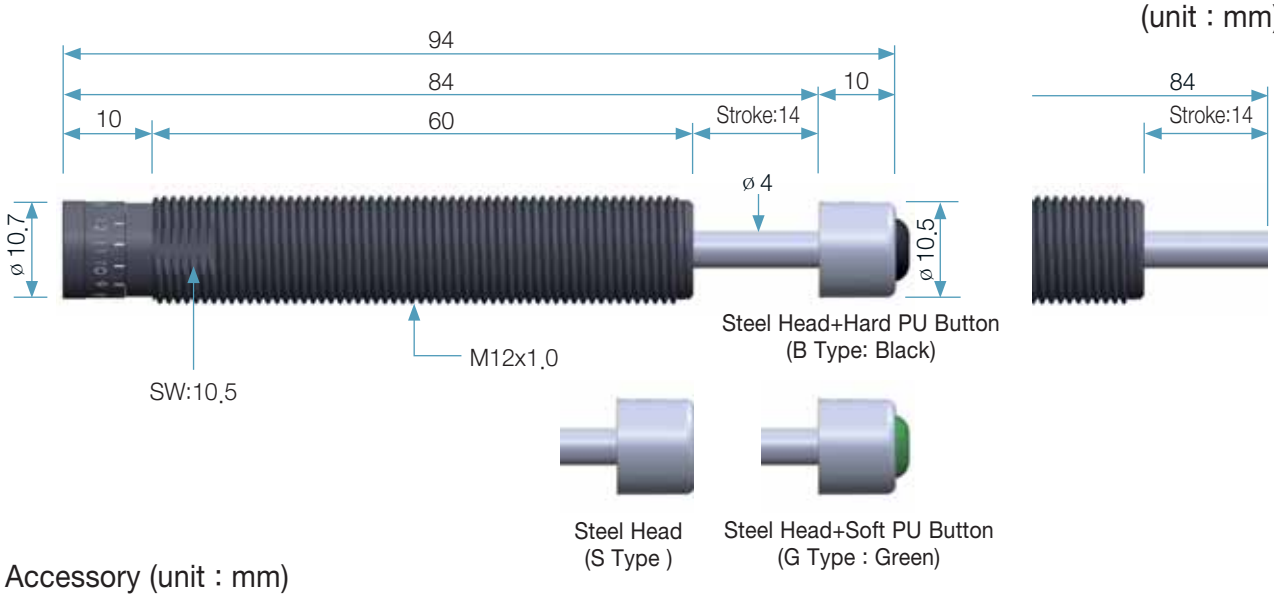

Accessory (unit : mm)

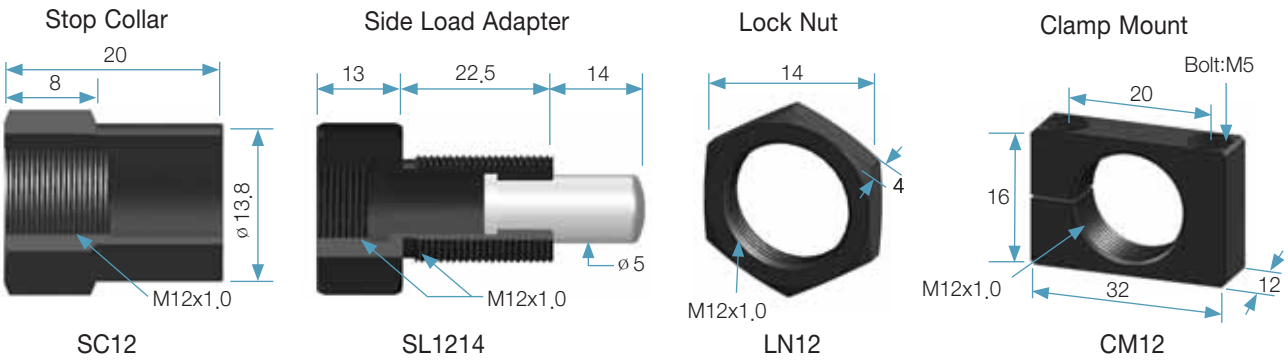

Adjustment Diagram

KMA 14 - 12(B)

Engineering Data

Model	Stroke (mm) S	Max.Energy / Cycle (Nm) E_T	Max.Energy /Hour (Nm/h) E_TC	Effective Weight (kg) We	Recoil Force (N)		Weight (g)
					Ext	Comp	
KMA14-12(B)	12	21.5	45,000	1.5-494	3.6	9.8	55
-12(B)LV				25.4-1,650			

(unit : mm)

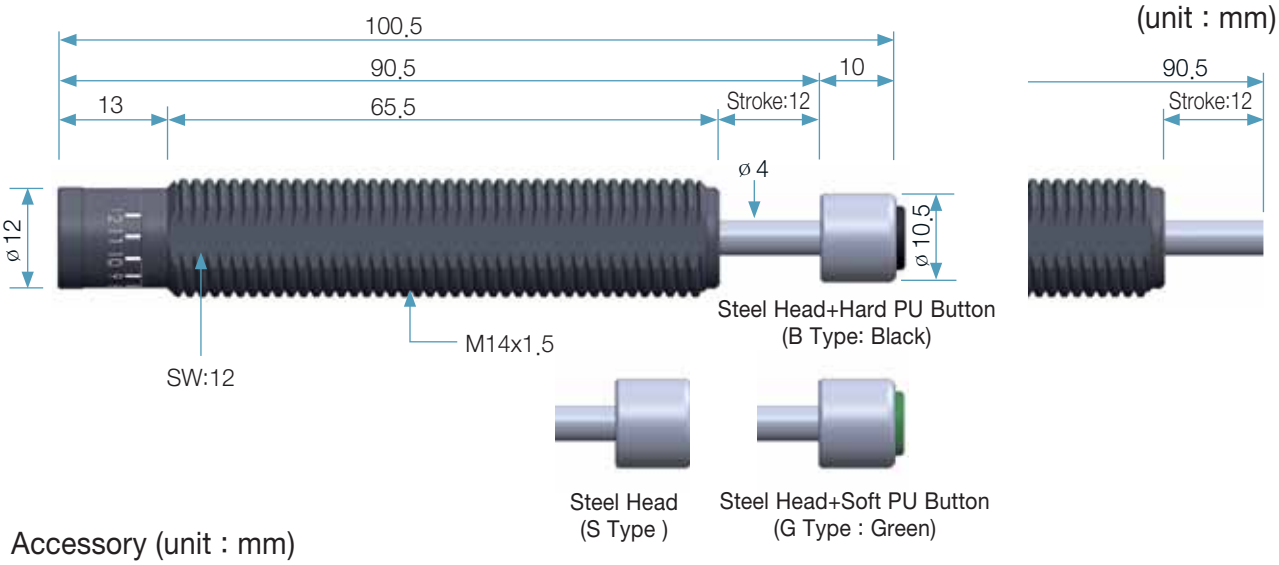

Accessory (unit : mm)

Stop Collar

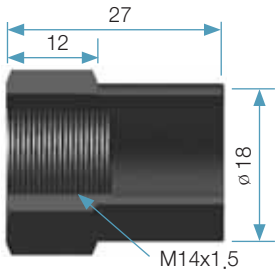

SC14

Side Load Adapter

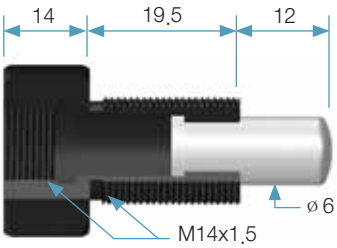

SL1412

Lock Nut

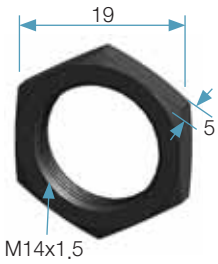

LN14

Clamp Mount

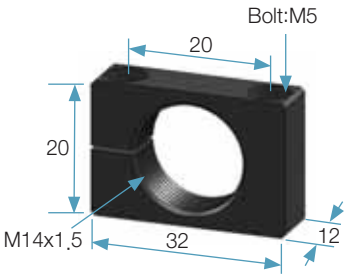

CM14

Adjustment Diagram

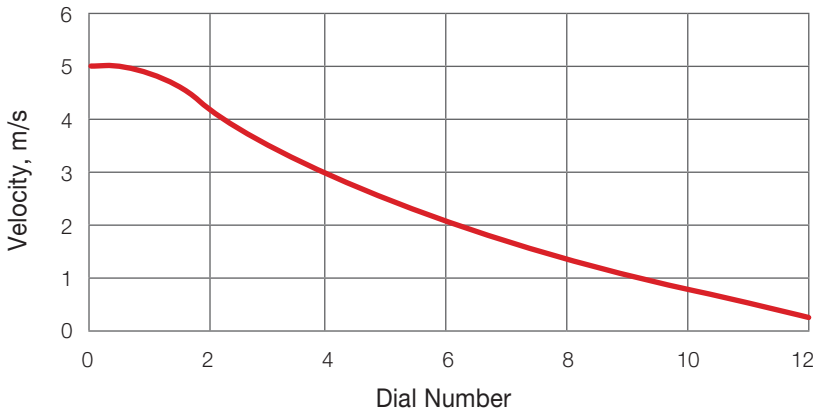

KMA 16 - 12(B)

Engineering Data

Model	Stroke (mm) S	Max.Energy / Cycle (Nm) E_T	Max.Energy /Hour (Nm/h) E_TC	Effective Weight (kg) We	Recoil Force (N)		Weight (g)
					Ext	Comp	
KMA16-12(B)	12	27	51,000	2-527	4.9	11.4	80
-12(B)LV				31.9-3,375			

(unit : mm)

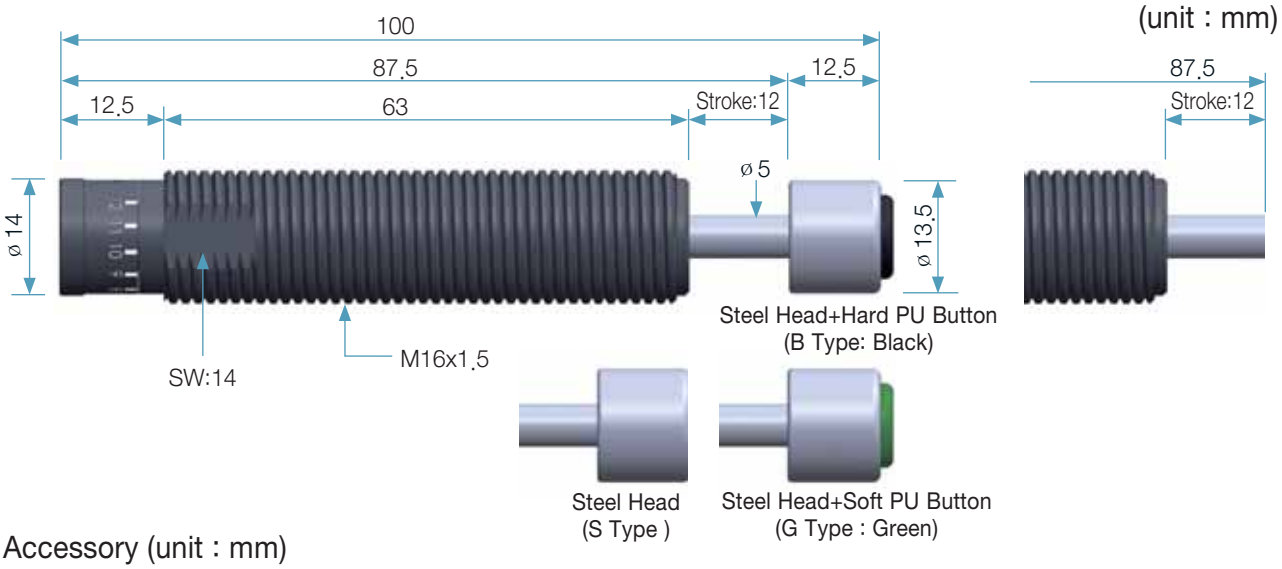

Accessory (unit : mm)

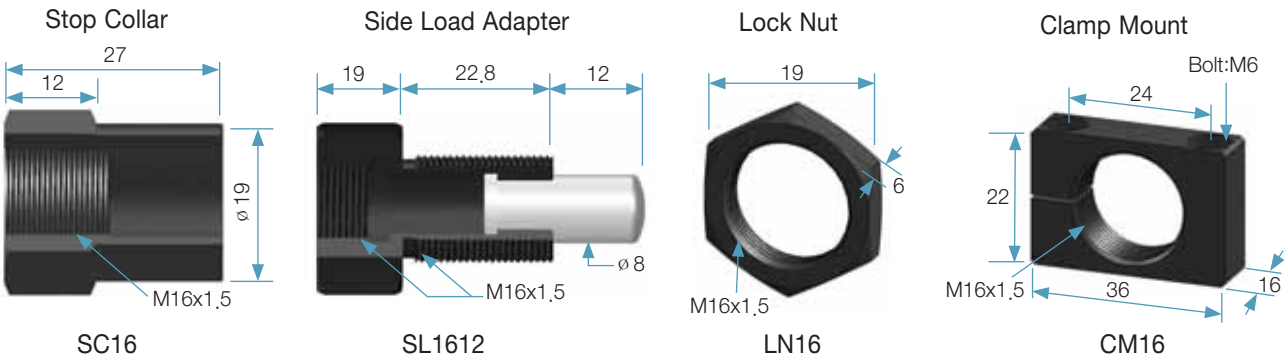

Adjustment Diagram

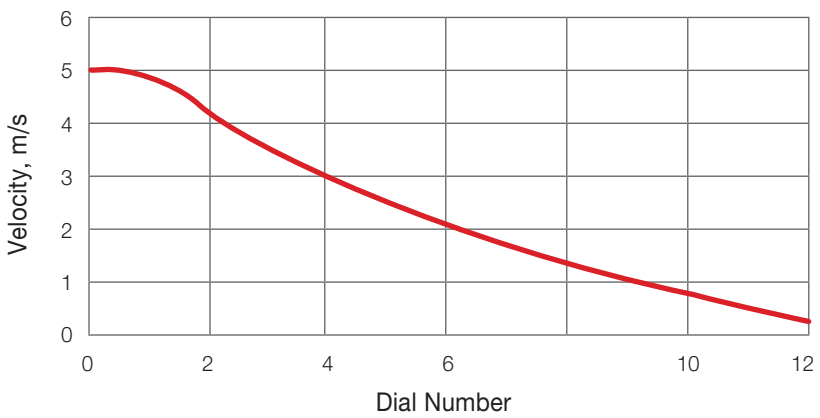

KMA 20 - 16(B)

Engineering Data

Model	Stroke (mm) S	Max.Energy / Cycle (Nm) E_T	Max.Energy /Hour (Nm/h) E_TC	Effective Weight (Kg) We	Recoil Force (N)		Weight (g)
					Ext	Comp	
KMA20-16(B)	16	61	63,000	4.5-1,230	8	19.6	145
-16(B)LV				72.1-5,600			

(unit : mm)

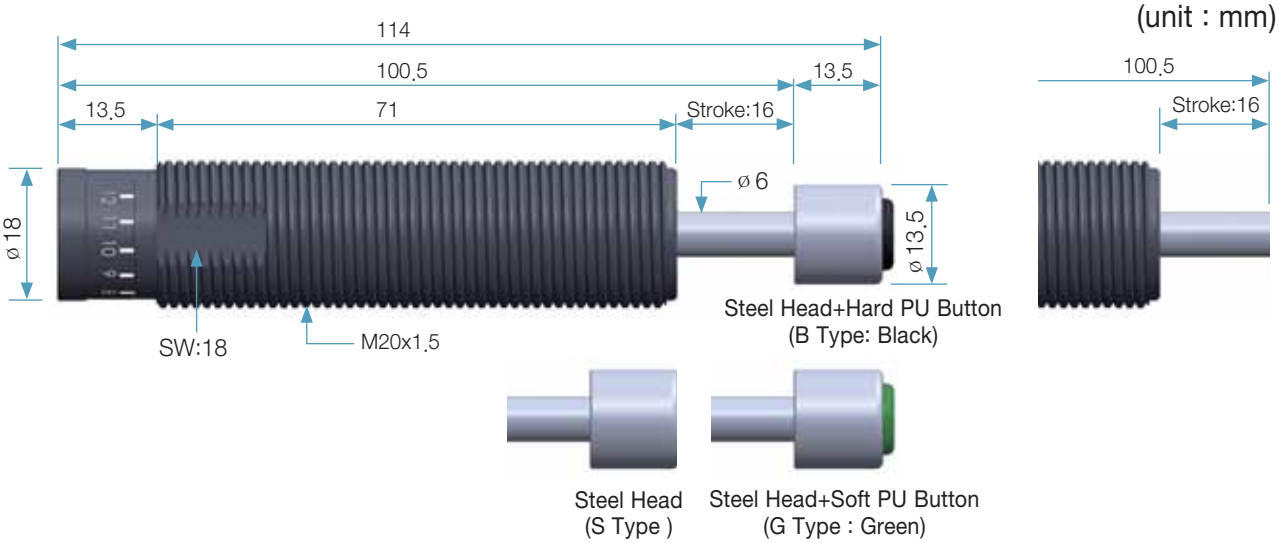

Accessory (unit : mm)

Stop Collar

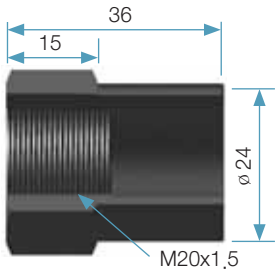

SC20

Side Load Adapter

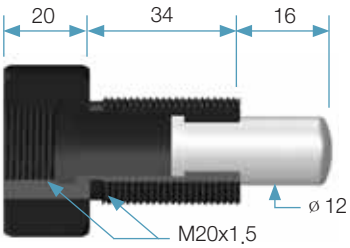

SL2016

Lock Nut

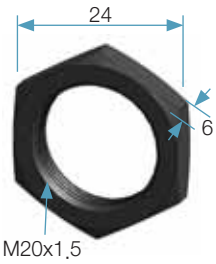

LN20

Clamp Mount

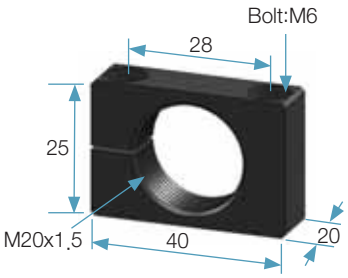

CM20

Adjustment Diagram

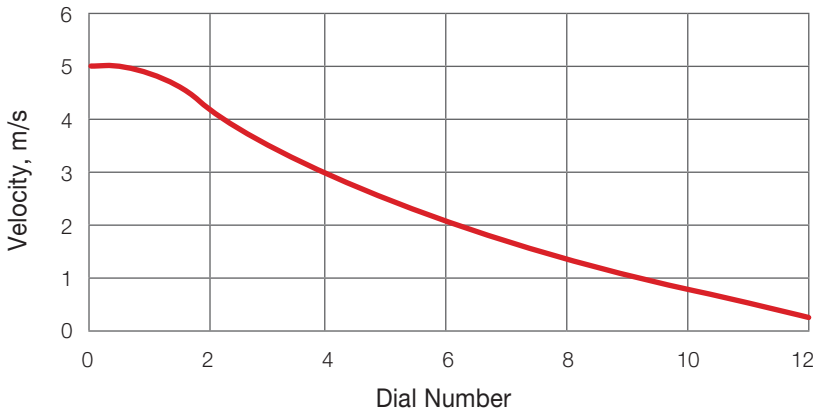

KMA 25 - 25(B)

Engineering Data

Model	Stroke (mm) S	Max.Energy / Cycle (Nm) E_T	Max.Energy /Hour (Nm/h) E_TC	Effective Weight (kg) We	Recoil Force (N)		Weight (g)
					Ext	Comp	
KMA25-25(B)	25	177	113,000	8.3-2,150	10.2	29.5	285
-25(B)LV				209.4-15,750			

(unit : mm)

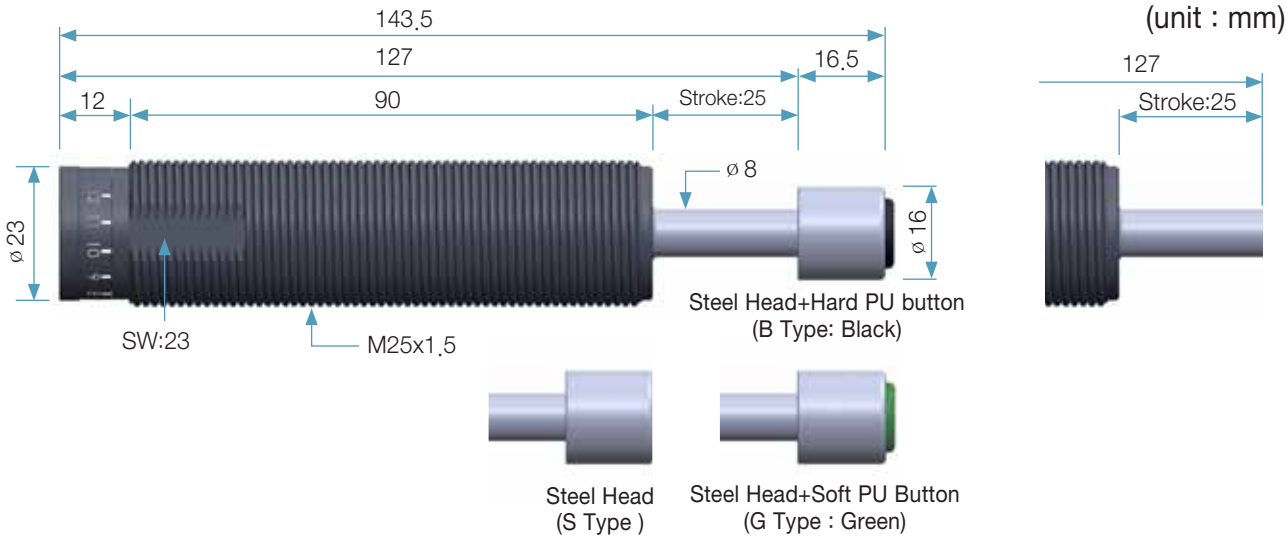

Accessory (unit : mm)

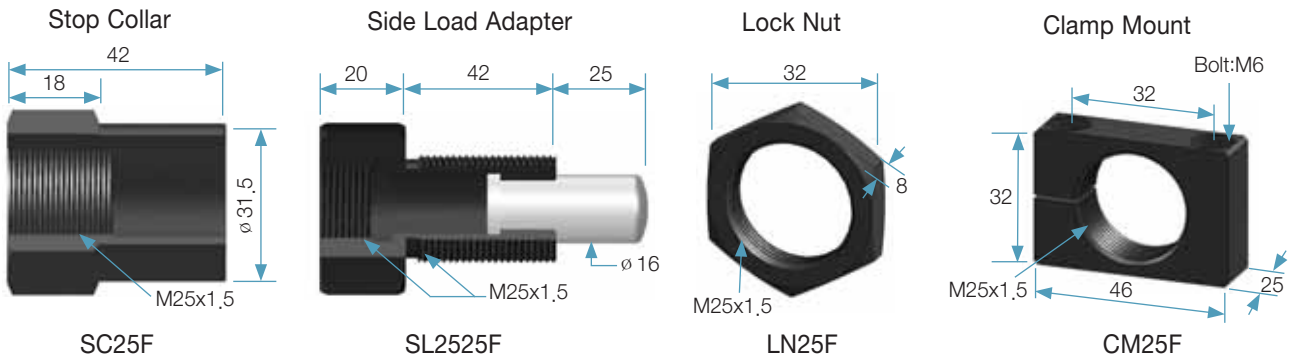

Adjustment Diagram

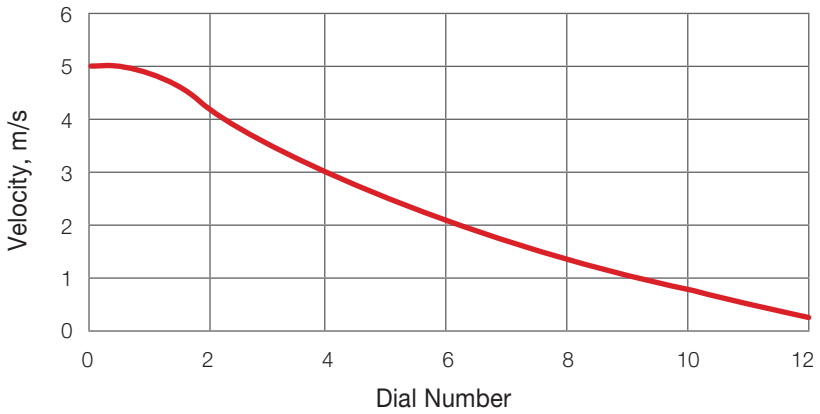

KMA 27 Series

Engineering Data

Model	Stroke (mm) S	Max.Energy / Cycle (Nm) E_T	Max.Energy /Hour (Nm/h) E_TC	Effective Weight (kg) We	Recoil Force (N) Ext	Recoil Force (N) Comp	Weight (g)
KMA27-25(B)	25	177	113,000	8.3-2,150	10.2	29.5	305
-25F(B)							
-25(F)(B)LV				209.4-15,750			
-40(B)	40	283	149,000	20-5,120	10	31	429
-40(B)LV				334.9-25,200			

(unit : mm)

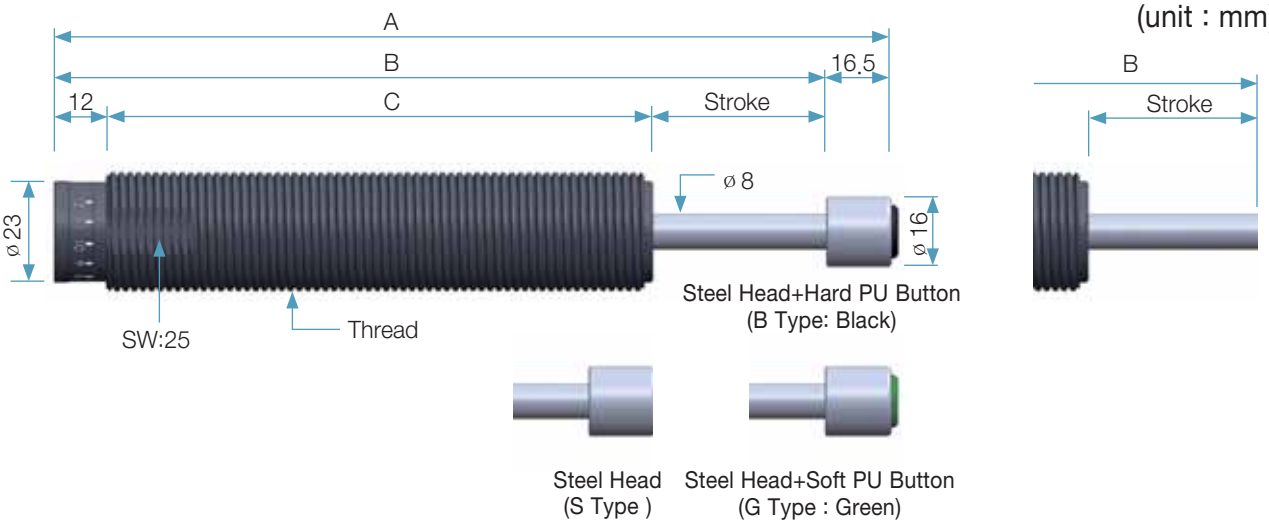

Dimensions (unit : mm)

Model	St	THREAD	A	B	C
KMA27-25(B)	25	M27x3.0	143.5	127	90
25(B)LV					
-25F(B)		M27x1.5			
-25F(B)LV					
-40(B)	40	M27x2.0	194.5	178	126
-40(B)LV					

Adjustment Diagram

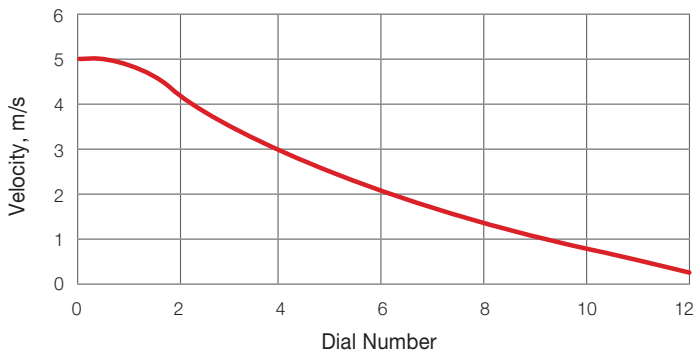

Accessory (unit : mm)

Stop Collar

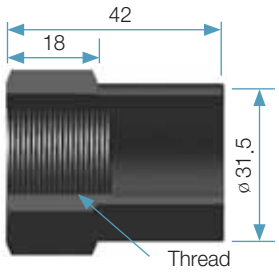

SC27/SC27F

Side Load Adapter

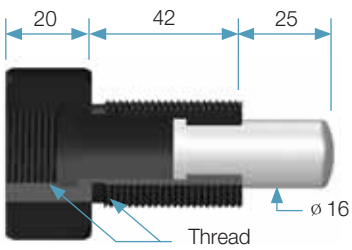

SL2725/SL2725F

Lock Nut

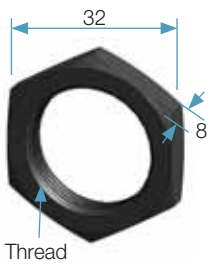

LN27/LN27F

Clamp Mount

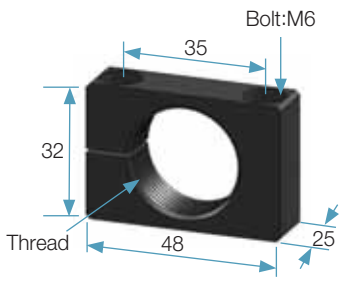

CM27/CM27F

KMA 30 - 35(B)

Engineering Data

Model	Stroke (mm) S	Max.Energy / Cycle (Nm) E_T	Max.Energy /Hour (Nm/h) E_TC	Effective Weight (kg) We	Recoil Force (N)		Weight (g)
					Ext	Comp	
KMA30-35(B)	35	356	137,000	25-6,950	17.8	50.3	610

(unit : mm)

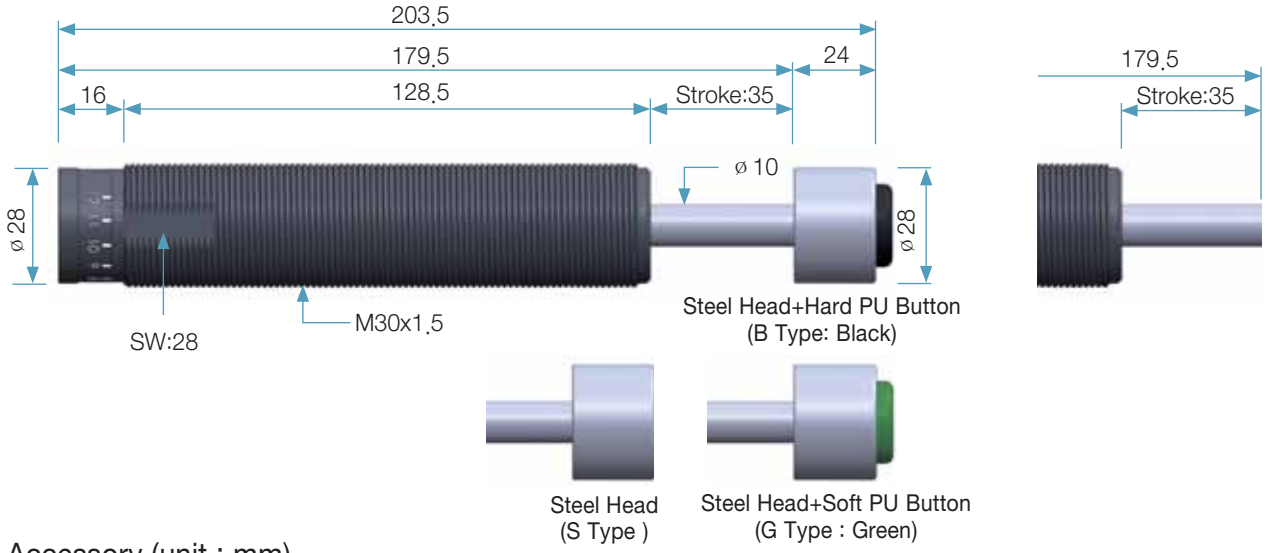

Accessory (unit : mm)

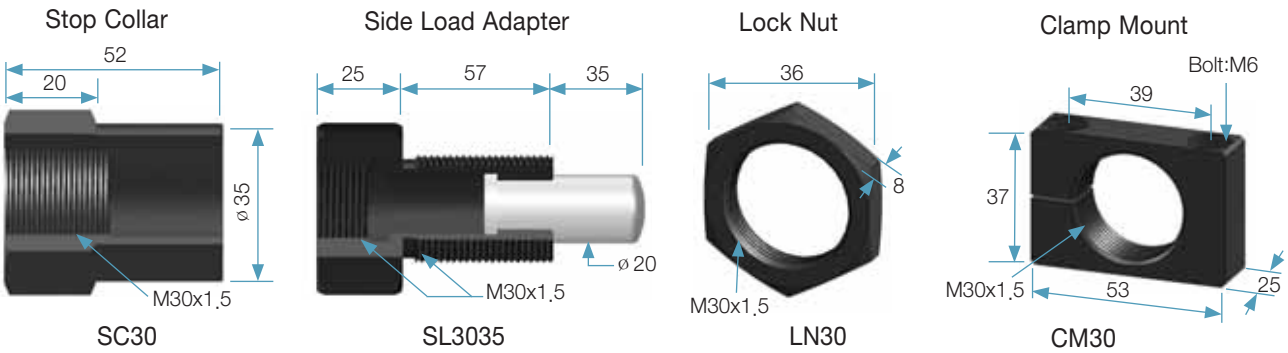

Adjustment Diagram

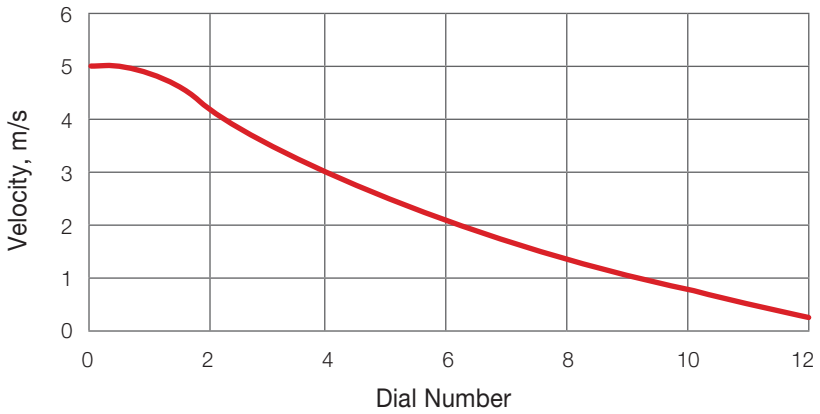

KMA 33 Series

Engineering Data

Model	Stroke (mm) S	Max.Energy / Cycle (Nm) E_T	Max.Energy /Hour (Nm/h) E_TC	Effective Weight (kg) We	Recoil Force (N)		Weight (g)
					Ext	Comp	
KMA33-25(B)	25	314	120,000	25-6,980	17.5	48.8	454
-25(B)LV				97-60,930			
-50(B)	50	628	150,000	50-14,000	13.6	65.3	580
-50(B)LV				192-120,312			

(unit : mm)

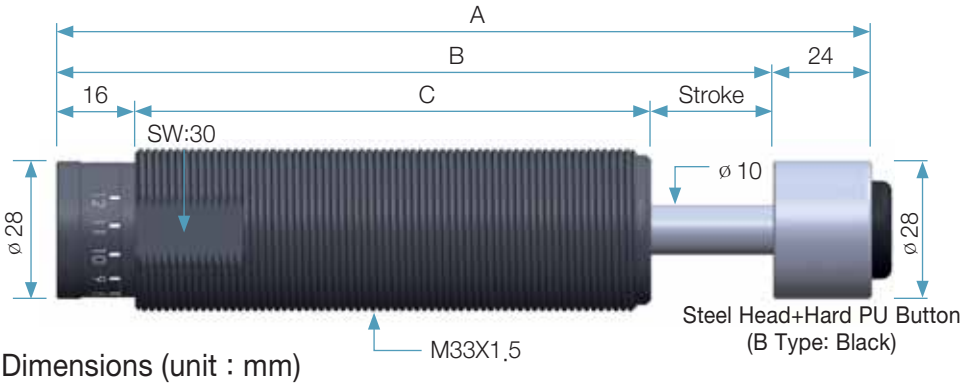

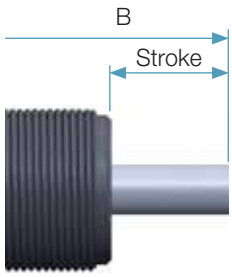

Dimensions (unit : mm)

Model	St	A	B	C
KMA33-25(B)	25	170	146	105
-25LV(B)				
-50(B)	50	229	205	139
-50LV(B)				

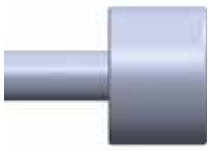

Steel Head
(S Type)

Steel Head+Soft PU Button
(G Type : Green)

Accessory (unit : mm)

Stop Collar

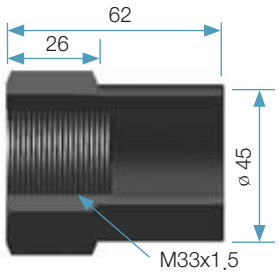

SC33

Side Load Adapter

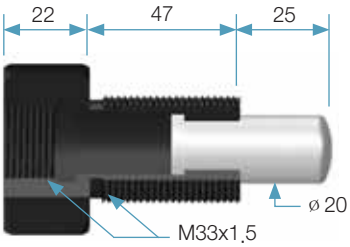

SL3325

Lock Nut

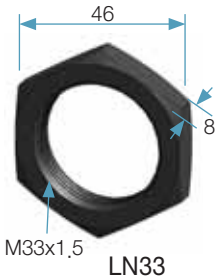

LN33

Clamp Mount

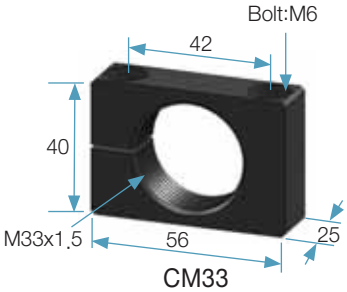

CM33

Rectangular Flange

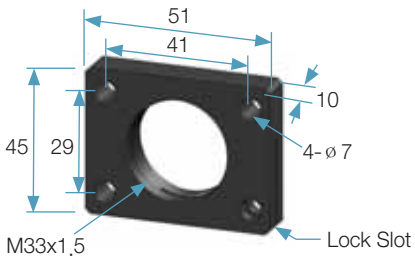

RF33

Adjustment Diagram

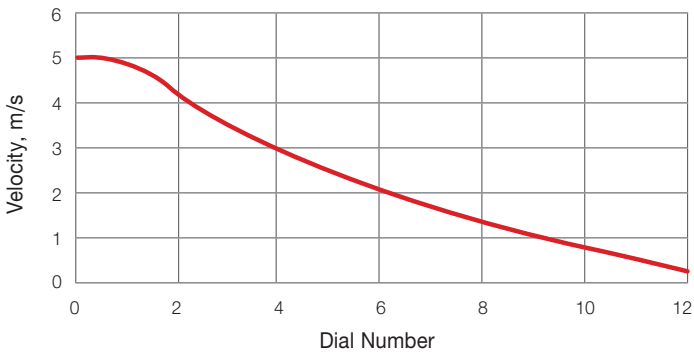

KMA 36 Series

Engineering Data

Model	Stroke (mm) S	Max.Energy / Cycle (Nm) E_T	Max.Energy /Hour (Nm/h) E_TC	Effective Weight (kg) We	Recoil Force (N) Ext	Recoil Force (N) Comp	Weight (g)
KMA36-25(B)	25	346	125,000	25-6,980	25	56.2	725
-25(B)LV				97-60,930			
-50(B)	50	692	160,000	50-14,000	22.5	60	885
-50(B)LV				192-120,312			

(unit : mm)

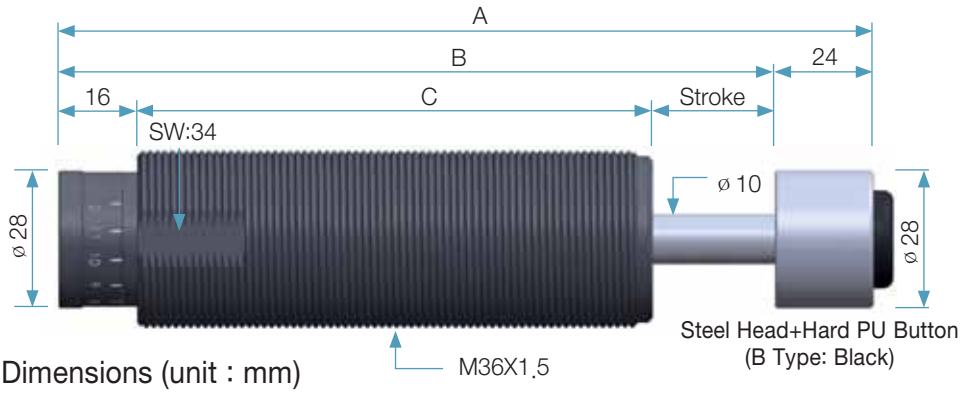

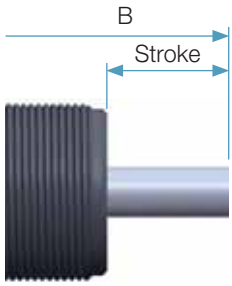

Dimensions (unit : mm)

Model	St	A	B	C
KMA36-25(B)	25	170	146	105
-25LV(B)				
-50(B)	50	229	205	139
-50LV(B)				

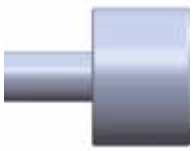

Steel Head
(S Type)

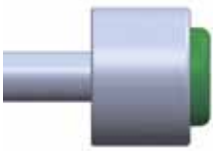

Steel Head+Soft PU Button
(G Type : Green)

Accessory (unit : mm)

Stop Collar

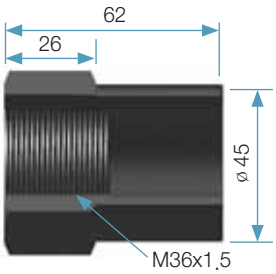

SC36

Side Load Adapter

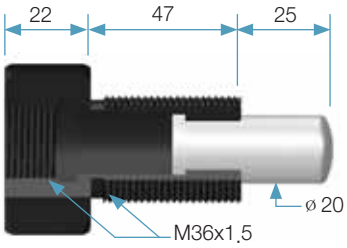

SL3625

Lock Nut

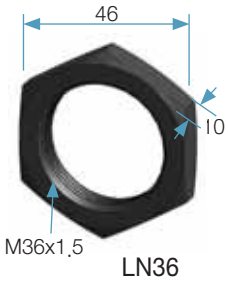

LN36

Clamp Mount

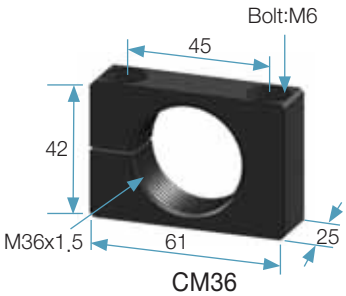

CM36

Rectangular Flange

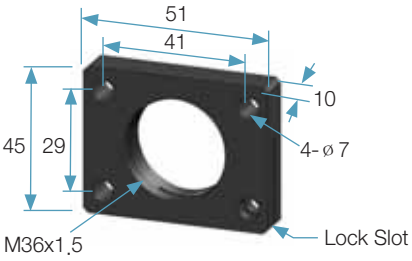

RF36

Adjustment Diagram

KMA/KMS Accessories Installation

NAME	Installation	Remark
Lock Nut		Installation is simply done by fastening Lock Nut. This is basic installation.
Stop Collar + Lock Nut		Stop Collar guarantees accurate stopping and positioning and protects "Bottoming out" of Piston.
Side Load Adapter + Lock Nut		When the shock absorber has to be installed in rotation application with short distance, Side load adapter prevent "one-side wearing".
Flange Mount		Use Square Flange or Rectangular Flange in order to fix shock Absorber convenientiy.
Clamp Mount		Clamp mount is used in horizontal installation usually and specially if the shock absorber is long.

KOBA
Best Energy Absorption

K M S Series

KMS series are self adjusting Shock Absorber adapted new slot metering type to provide higher energy absorption capacity and wide range of effective weight

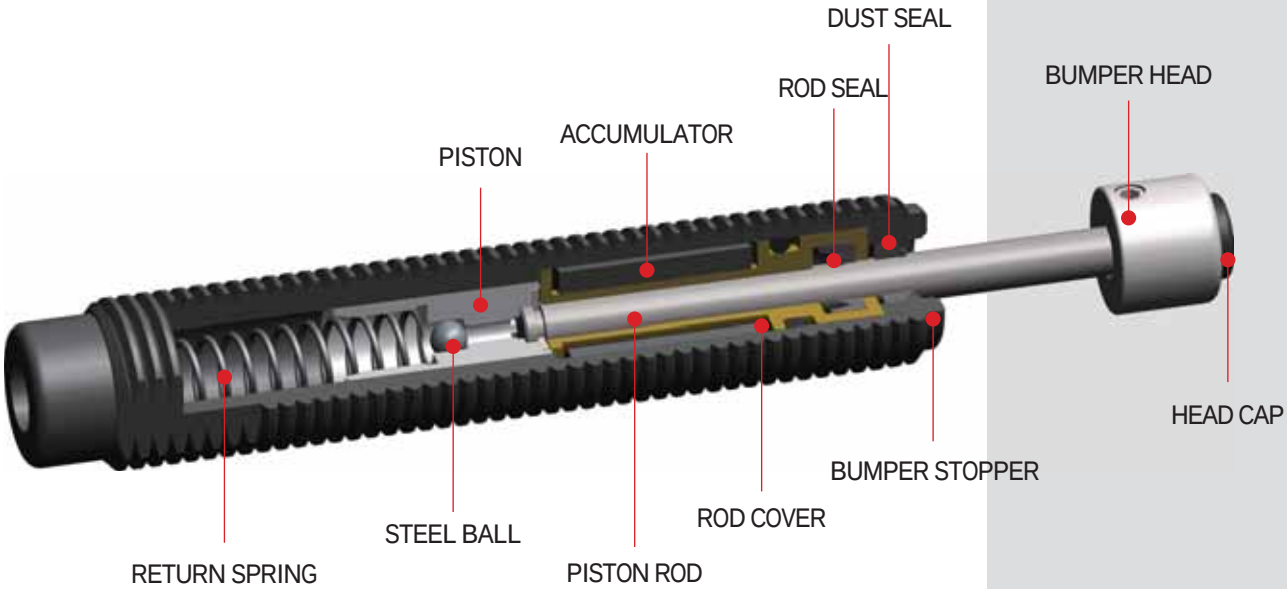

Properties

- KMS non-adjustable shock absorber offer broad range of damping characteristic
- New KMS Series offer higher energy capacity based on a new technology developed by KOBA
- The body of KMS is designed as one unit, solid and root up the Bottom out problem
- KOBA's orifice design of the shock tube provides best deceleration and most efficient energy absorption.
- KMS Series are manufactured according ISO quality standards.
- All shock absorber offer highest flexibility by using different kind of bumper heads, steel, black or green (soft)
- Material of the piston rod is special hardened stainless steel providing highest life cycle rate.
- New developed piston offers precise movement with low friction for extra long life span.
- positive stop integrated in the housing

KMS Series Ordering Information

KMS 10 - 08 B N - 2 - SC

- SC: 〈 Accessory Series 〉
  - SC : Stop Collar
  - RF : Rectangular Flange
  - CM : Clamp Mount
- 2: Effective Weight : 1,2,3,4
- N: surface : standard black; N : nickel plated, SS : stainless steel
- B: Bumper Head
  S : steel cap
  B : standard black cap
  G : green - soft cap
  for KMS08,KMS10 series
  only B : black cap
- 08: Stroke
- 10: Body Thread Size
- KMS: KM: Series; S:self-adjustable

Accessory Series Charts

Accessories	Stop Collar	Rectangular Flange	Clamp Mount
Symbols / Model	SC	RF	CM
KMS 08-06	●		●
KMS 10-08	●		●
KMS 12-10	●		●
KMS 14-15	●		●
-20	●		●
KMS 20-20	●		●
-30	●		●
-50	●		●
KMS 25-25	●		●
-40	●		●
-50	●		●
-80	●		●
KMS 36-25	●	●	●
-50	●	●	●
-80	●	●	●

KMS 08 - 06(B)

Engineering Data

Model	Stroke (mm)	Max.Energy / Cycle (Nm) E_T	Max.Energy /Hour (Nm/h) E_TC	Effective Weight (kg)			Recoil Force (N)		Weight (g)
				1	2	3	Ext.	Comp.	
KMS08-06(B)	6	5	8,000	0.8-2.8	2.5-12.3	10-111	2.2	5.8	10

(unit : mm)

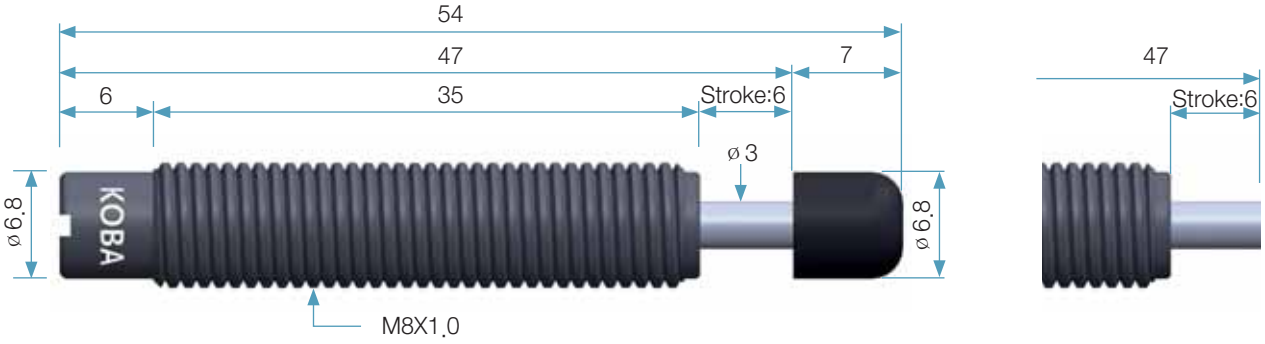

Accessory (unit : mm)

Stop Collar

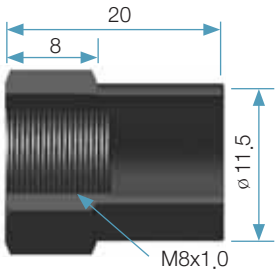

SC08

Lock Nut

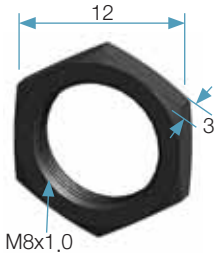

LN08

Clamp Mount

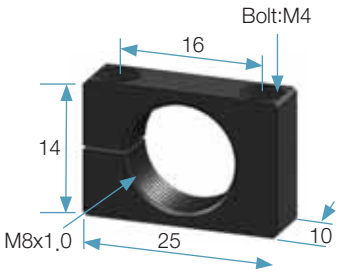

CM08

KMS 10 - 08(B)

Engineering Data

Model	Stroke (mm) S	Max.Energy / Cycle (Nm) E_T	Max.Energy /Hour (Nm/h) E_TC	Effective Weight (kg)			Recoil Force (N)		Weight (g)
				1	2	3	Ext.	Comp.	
KMS10-08(B)	8	11	14,500	1.8-6.1	5.5-27	22-244	2.5	6.9	15.5

(unit : mm)

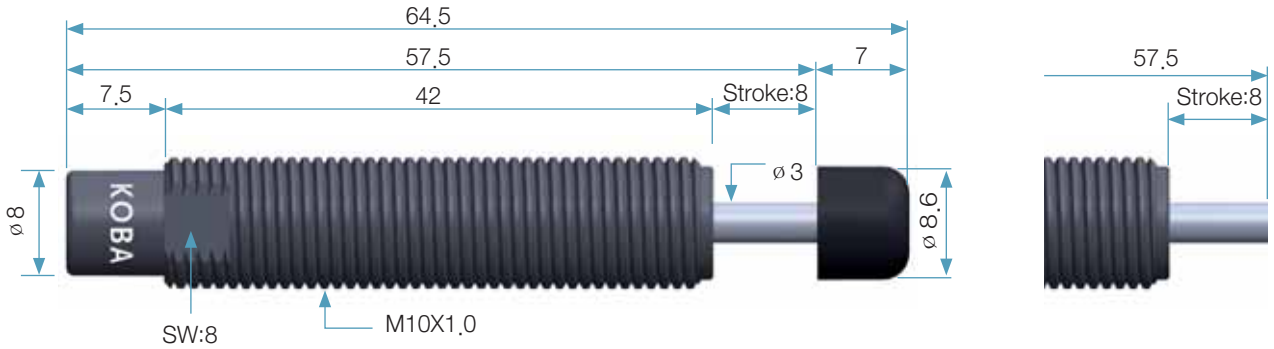

Accessory (unit : mm)

Stop Collar

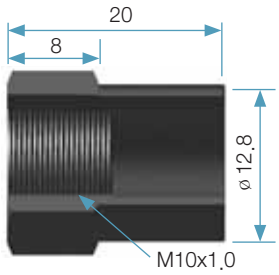

SC10

Lock Nut

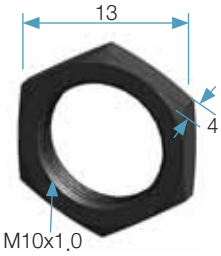

LN10

Clamp Mount

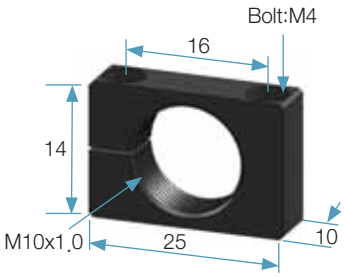

CM10

KMS 12 - 10(B)

Engineering Data

Model	Stroke (mm) S	Max.Energy / Cycle (Nm) E_T	Max.Energy /Hour (Nm/h) E_TC	Effective Weight (kg)			Recoil Force (N)		Weight (g)
				1	2	3	Ext.	Comp.	
KMS12-10(B)	10	18	34,000	2.9-10	9-44	36-400	3.7	9.6	23

(unit : mm)

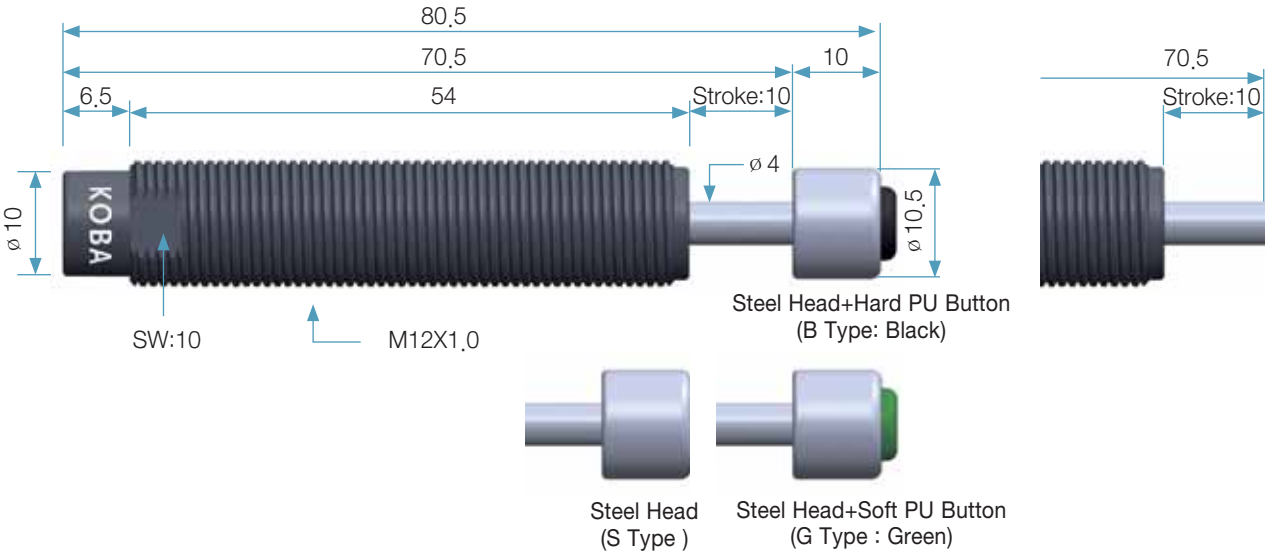

Accessory (unit : mm)

Stop Collar

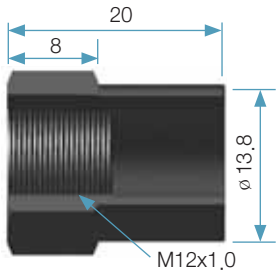

SC12

Lock Nut

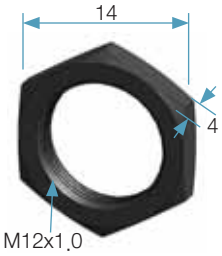

LN12

Clamp Mount

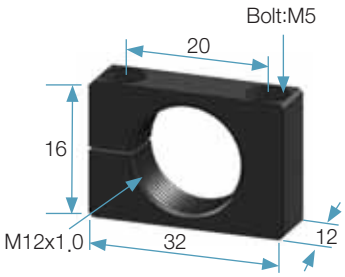

CM12

KMS 14 Series
Engineering Data

Model	Stroke (mm) S	Max.Energy / Cycle (Nm) E_T	Max.Energy /Hour (Nm/h) E_TC	Effective Weight (kg)			Recoil Force (N)		Weight (g)
				1	2	3	Ext.	Comp.	
KMS14-15(B) -15F(B)	15	34	51,000	5-18	17-84	68-755	3.8	13.3	43

(unit : mm)

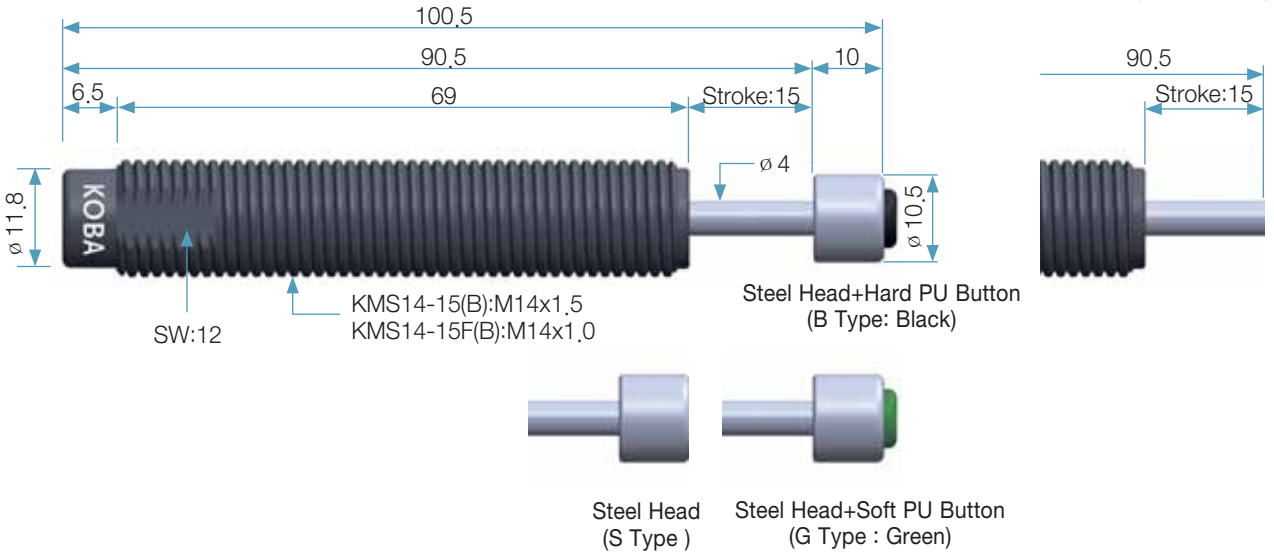

Accessory (unit : mm)

Stop Collar

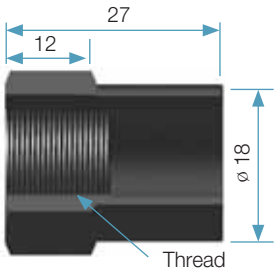

SC14/SC14F

Lock Nut

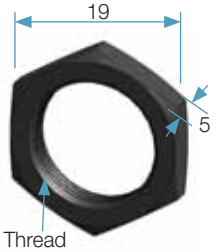

LN14/LN14F

Clamp Mount

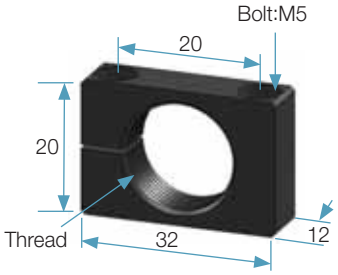

CM14/CM14F

KMS 20-20(B)

Engineering Data

Model	Stroke (mm) S	Max.Energy / Cycle (Nm) E_T	Max.Energy /Hour (Nm/h) E_TC	Effective Weight (kg)			Recoil Force (N)		Weight (g)
				1	2	3	Ext.	Comp.	
KMS20-20(B)	20	105	55,000	13-39	36-210	173-2,333	8.2	23	140

(unit : mm)

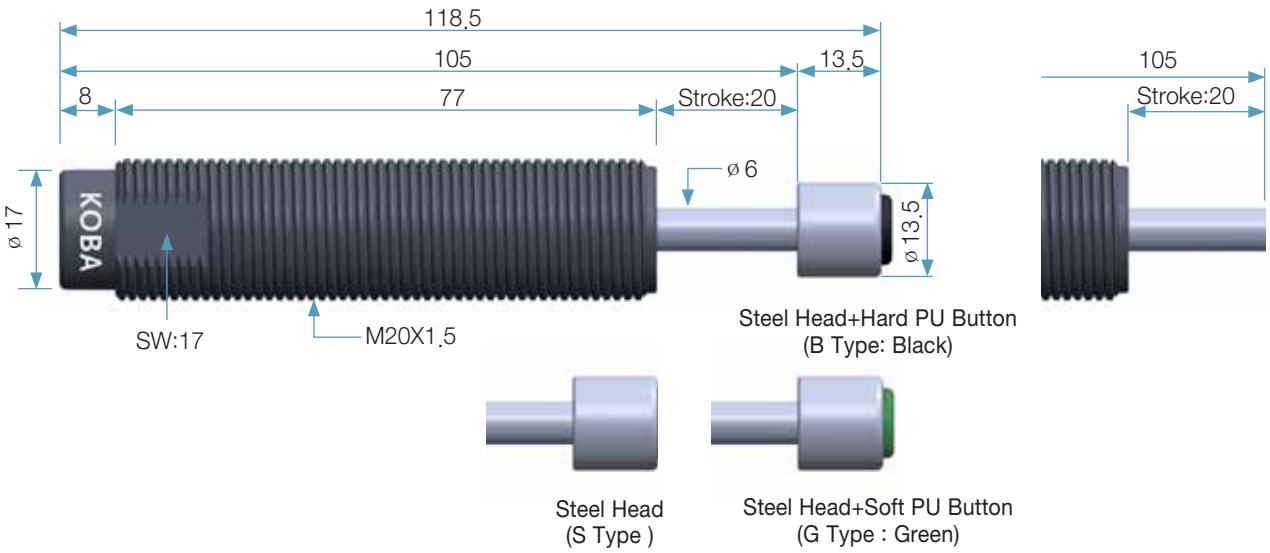

Accessory (unit : mm)

Stop Collar

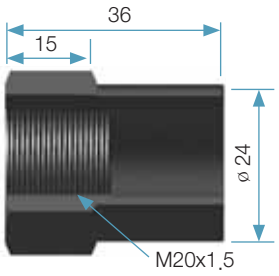

SC20

Lock Nut

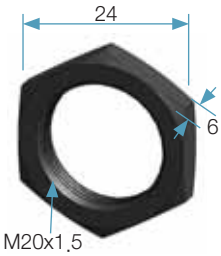

LN20

Clamp Mount

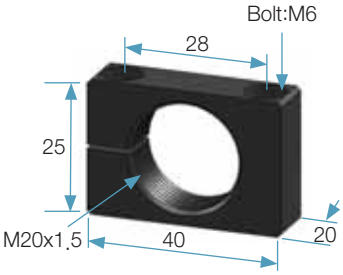

CM20

KMS 25 Series
Engineering Data

Model	Stroke (mm) S	Max.Energy / Cycle (Nm) E_T	Max.Energy /Hour (Nm/h) E_TC	Effective Weight (Kg)			Recoil Force (N)		Weight (g)
				1	2	3	Ext.	Comp.	
KMS25-25(B) -25F(B)	25	226	69,000	28-85	78-452	373-5,022	11	29	265

(unit : mm)

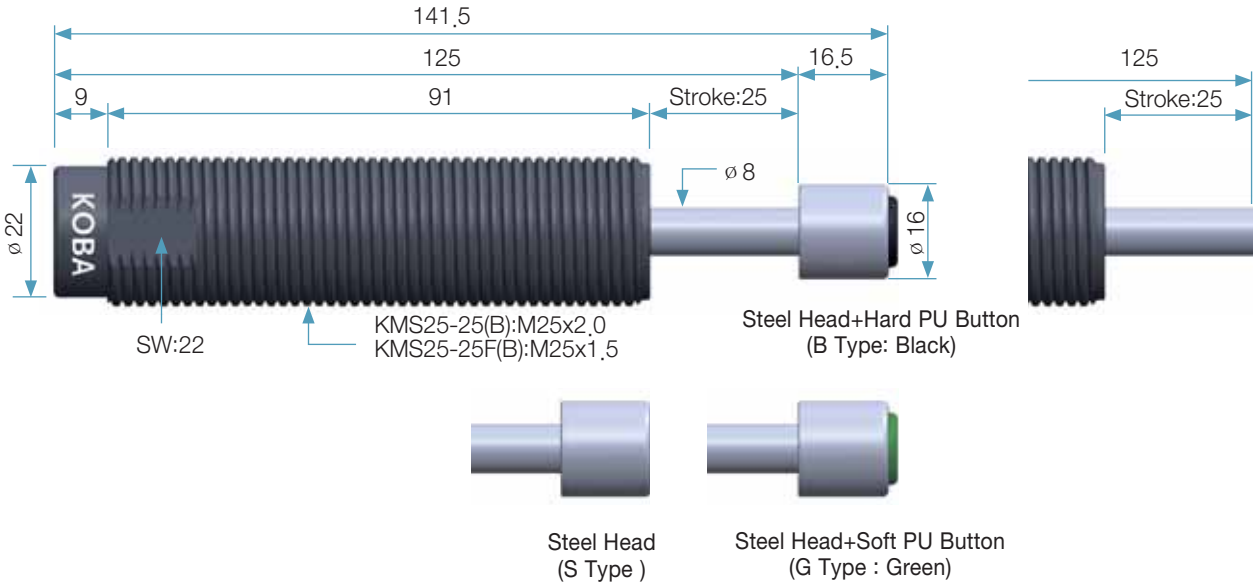

Accessory (unit : mm)

Stop Collar

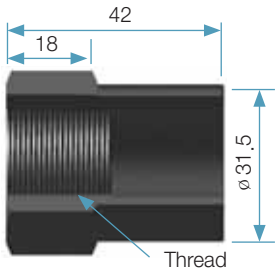

SC25/SC25F

Lock Nut

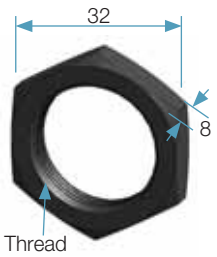

LN25/LN25F

Clamp Mount

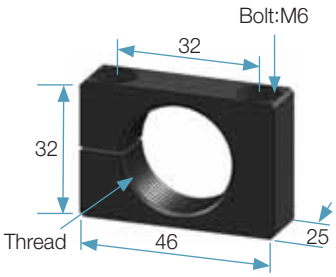

CM25/CM25F

KMS 36 - 25(B)

Engineering Data

Model	Stroke (mm) S	Max.Energy / Cycle (Nm) E_T	Max.Energy /Hour (Nm/h) E_TC	Effective Weight (kg)			Recoil Force (N)		Weight (g)
				1	2	3	Ext.	Comp.	
KMS36-25(B)	25	490	115,000	61-185	170-500	435-10,888	25	64.3	758

(unit : mm)

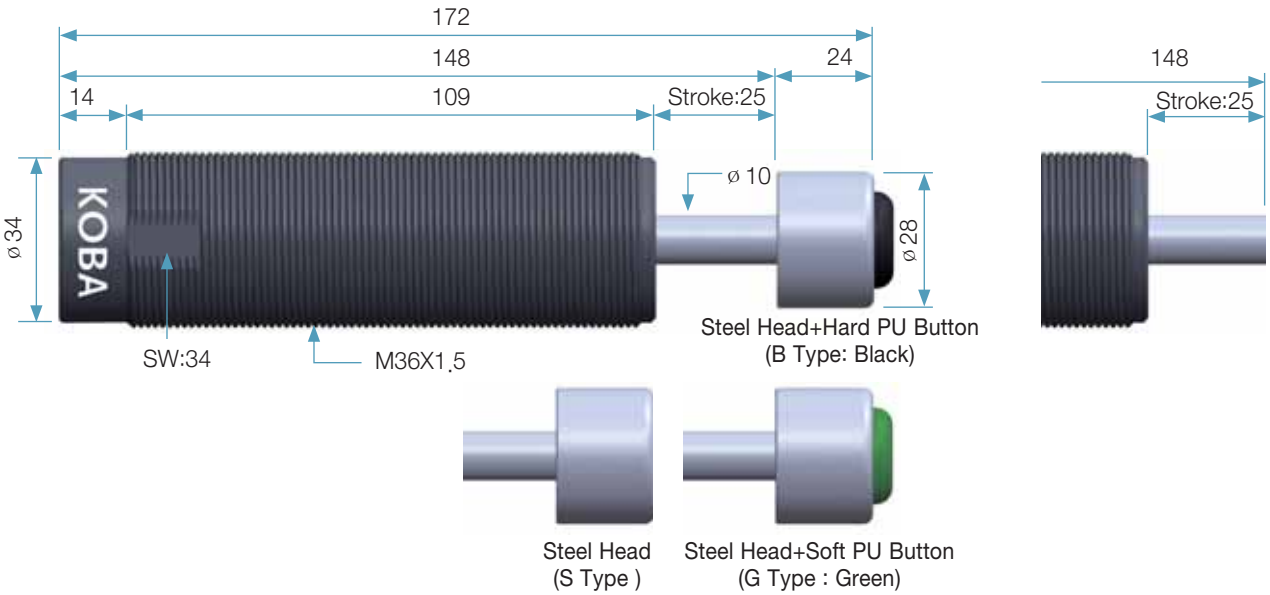

Accessory (unit : mm)

Stop Collar

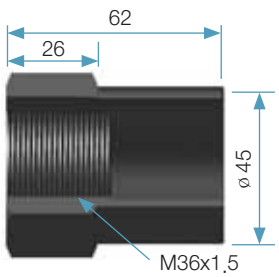

SC36

Lock Nut

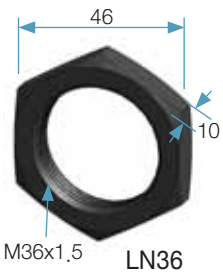

LN36

Clamp Mount

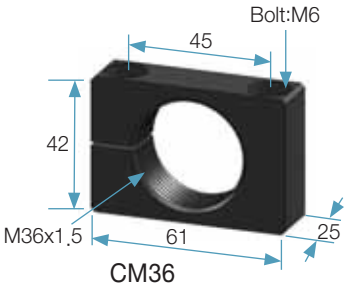

CM36

Rectangular Flange

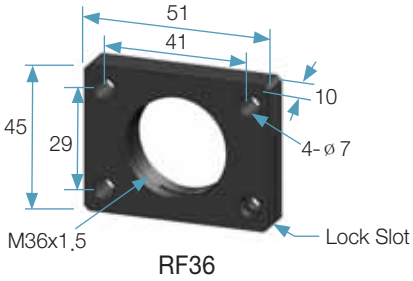

RF36

▣ KMS LONG STROKE TYPE

KMS 14 - 20(B) Engineering Data

Model	Stroke (mm) S	Max.Energy / Cycle (Nm) E_T	Max.Energy /Hour (Nm/h) E_TC	Effective Weight (kg)			Recoil Force (N)		Weight (g)
				1	2	3	Ext.	Comp.	
KMS14-20(B)	20	13	45,500	2-7	6.5-32	26-288	3.6	13.9	71

(unit : mm)

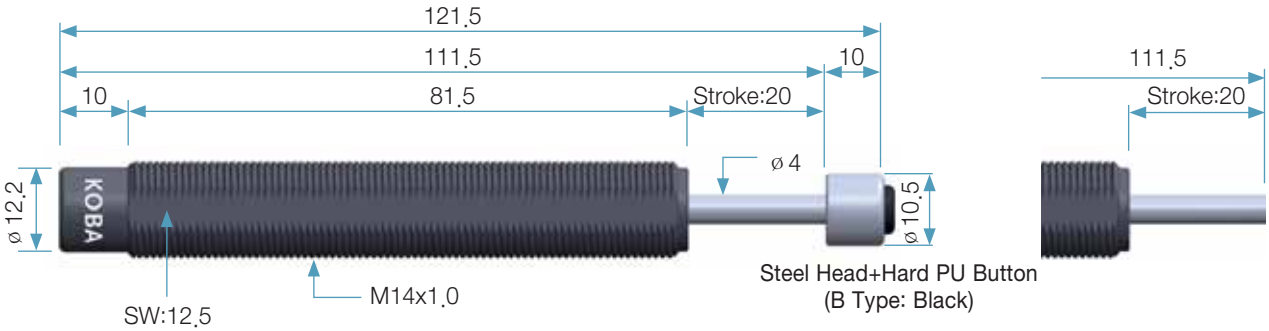

Steel Head+Hard PU Button
(B Type: Black)

Steel Head
(S Type)

Steel Head+Soft PU Button
(G Type : Green)

Accessory (unit : mm)

Stop Collar

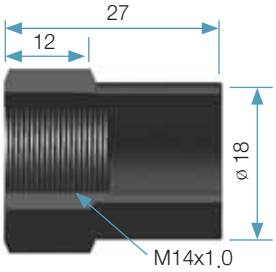

SC14F

Lock Nut

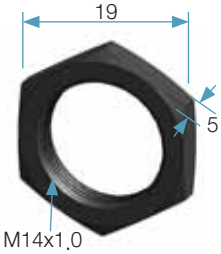

LN14F

Clamp Mount

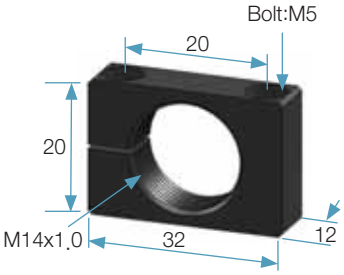

CM14F

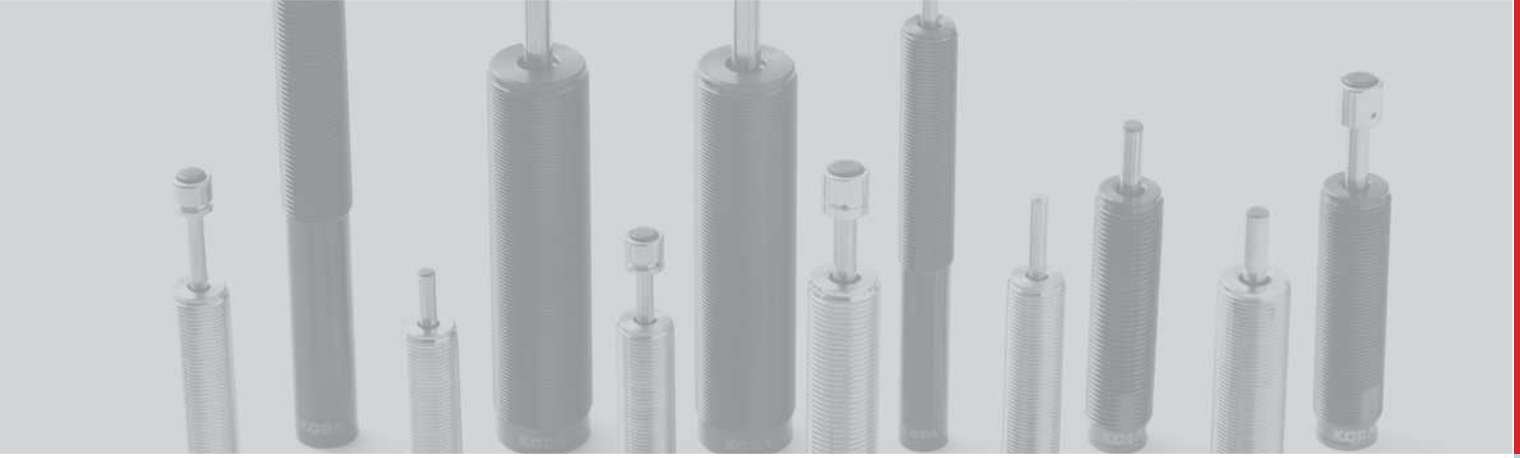

KMS 20 Series
Engineering Data

Model	Stroke (mm) S	Max.Energy / Cycle (Nm) E_T	Max.Energy /Hour (Nm/h) E_TC	Effective Weight (kg)			Recoil Force (N)		Weight (g)
				1	2	3	Ext.	Comp.	
KMS20-30(B)	30	52	31,100	85-28	26-128	104-1,155	6.3	16.8	188
-50(B)	50	82	37,800	13-45	41-202	164-1,822	7.8	16.6	268.6

(unit : mm)

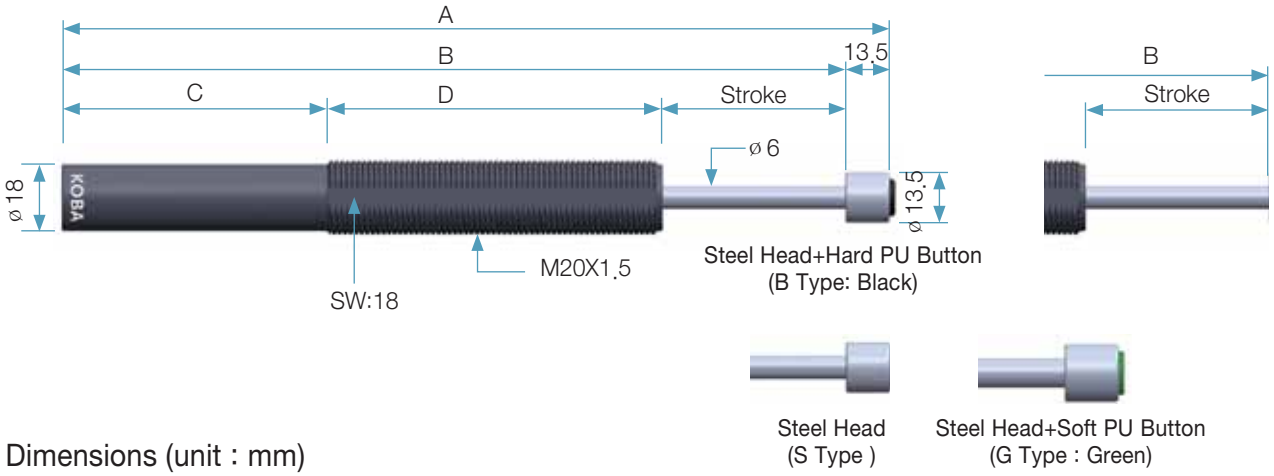

Dimensions (unit : mm)

Model	St	A	B	C	D
KMS20-30(B)	30	144.5	131	11	90
-50(B)	50	227.5	214	72.5	91.5

Accessory (unit : mm)

Stop Collar

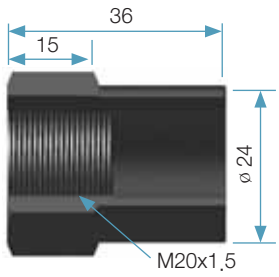

SC20

Lock Nut

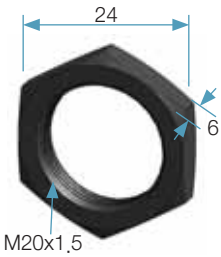

LN20

Clamp Mount

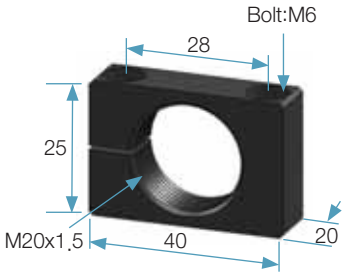

CM20

KMS 25 Series
Engineering Data

Model	Stroke (mm) S	Max.Energy / Cycle (Nm) E_T	Max.Energy /Hour (Nm/h) E_TC	Effective Weight (Kg)			Recoil Force (N)		Weight (g)
				1	2	3	Ext.	Comp.	
KMS25-40(B)	40	110	94,000	18-60	55-271	220-2,444	13.7	30.9	342.5
-50(B)	50	120	41,000	19-66	60-296	240-2,666	13.9	30.5	457.5
-80(B)	80	160	54,200	26-88	80-395	320-3,555	14.9	29.8	577.5

(unit : mm)

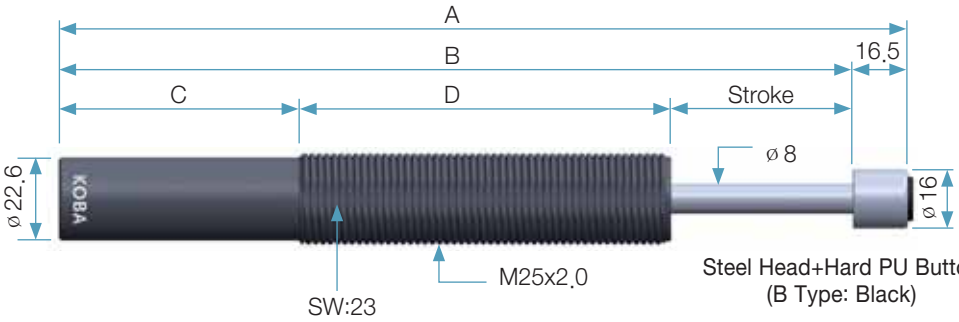

Steel Head+Hard PU Button
(B Type: Black)

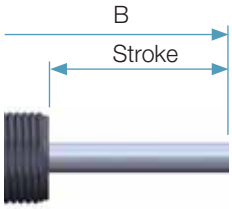

Steel Head
(S Type)

Steel Head+Soft PU Button
(G Type : Green)

Dimensions (unit : mm)

Model	St	Thread	A	B	C	D
KMS25-40(B)	40	M25x2.0	174.5	158	12	106
-50(B)	50	M25x2.0	234.5	218	66	102
-80(B)	80	M25x2.0	328.5	312	90	142

Accessory (unit : mm)

Stop Collar

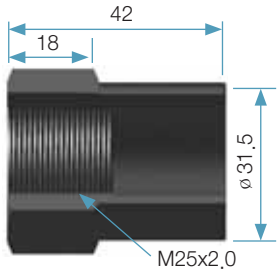

SC25

Lock Nut

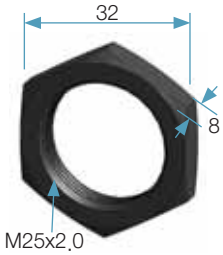

LN25

Clamp Mount

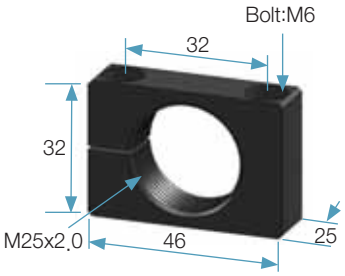

CM25

KMS 36 Series
Engineering Data

Model	Stroke (mm) S	Max.Energy / Cycle (Nm) E_T	Max.Energy /Hour (Nm/h) E_TC	Effective Weight (kg)			Recoil Force (N)		Weight (g)
				1	2	3	Ext.	Comp.	
KMS36-50(B)	50	220	162,000	35-121	110-543	440-4,888	24.4	44.6	994
-80(B)	80	340	232,800	55-188	170-839	680-7,555	25.4	45.6	1,280

(unit : mm)

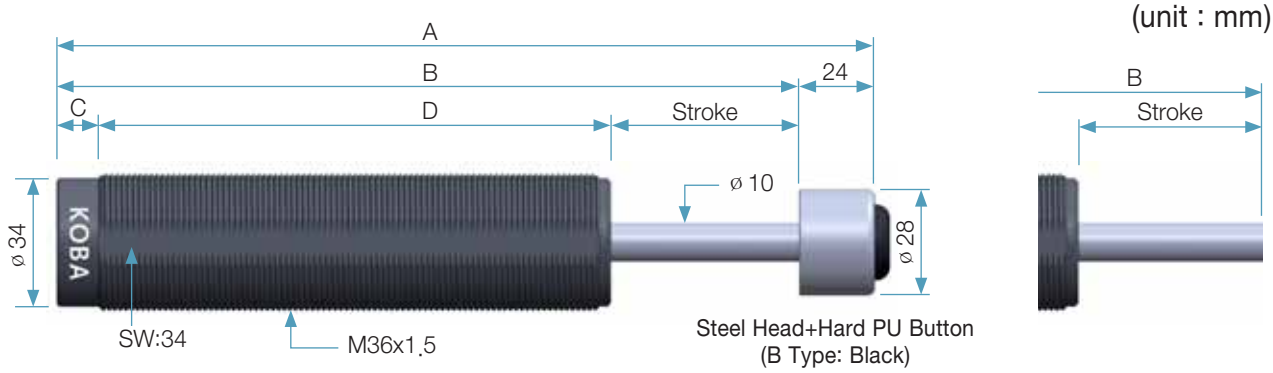

Steel Head
(S Type)

Steel Head+Soft PU Button
(G Type : Green)

Dimensions (unit : mm)

Model	St	A	B	C	D
KMS36-50(B)	50	221	197	11	136
-80(B)	80	352	328	11	237

Accessory (unit : mm)

Stop Collar

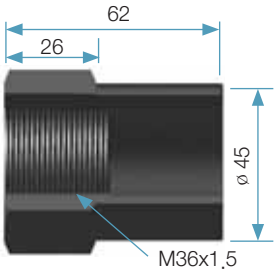

SC36

Lock Nut

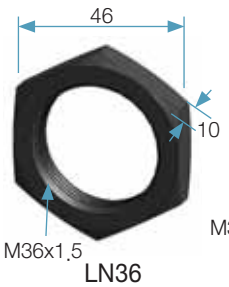

LN36

Clamp Mount

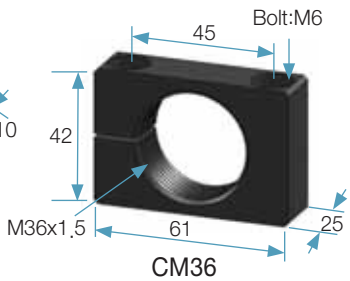

CM36

Rectangular Flange

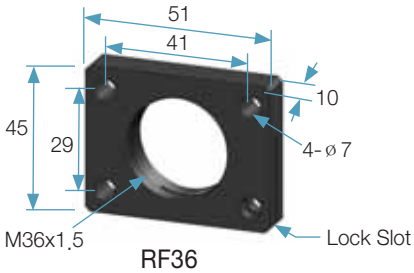

RF36

KSA Series

KOBA
Best Energy Absorption

KSA - adjustable high energy serles

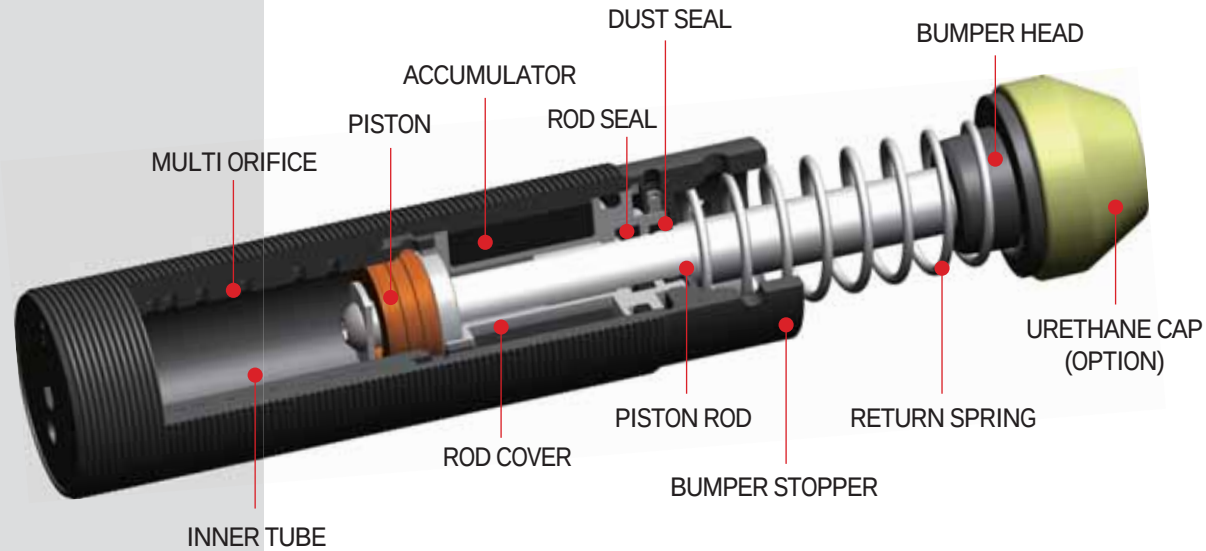

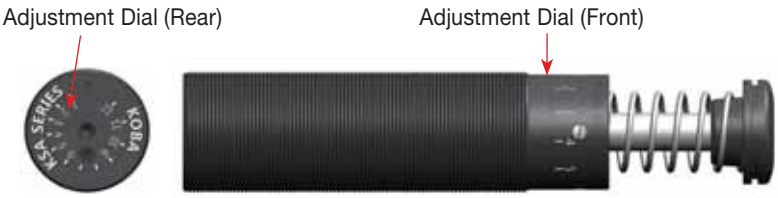

properties

- New designed full body structure for highest energy capcity
- both sided adjustment
- Fully threaded body for more flexibility of installation
- Piston Rod special heat treated, Rod Cover, double lip seal and dust whiper
- Body black zinc plated for highest corrosion resistance up to 320 hours salt spray test
- Urethane Cap for soft impact and low noise.
- impact velocity 0.3~5.0 m/s
- Standard temperature range -10~80 ℃
- option -40 ~120 ℃
- Application : Robotic, linear movement technology, emergency stop, turntable and corner composer,

KSA Series Ordering Information

KSA 45 - 50 N - SC

- KSA: KS: Series, A:adjustable
- 45: Body Thread Size
- 50: Stroke
- N: surface standard black, N : nickel plated
- SC: 〈 Accessory Series 〉
  - SC : Stop Collar
  - UC : Urethane Cap
  - SF : Square Flange
  - RF : Retangular Flange
  - LC : Lock Collar
  - RC : Rod Clevis
  - EC : End Clevis
  - CM : Clamp Mount

Accessory Series Charts

Accessories	Urethane Cap	Square Flange	Rectangular Flange	Lock Collar	Stop Collar	Rod Clevis	End Clevis	Clamp Mount
Symbols / Model	UC	SF	RF	LC	SC	RC	EC	CM
KSA 45 Series	●	●	●	●	●	●	●	●
KSA 64 Series	●	●	●	●	●	●	●	●
KSA 85 Series	●	●		●	●	●	●	●

KSA 45 Series

Engineering Data

Model	Stroke (mm) S	Max.Energy / Cycle (Nm) E_T	Max.Energy /Hour (Nm/h) E_TC	Effective Weight (kg) We	Recoil Force (N)		Weight (kg)
					Ext.	Comp.	
KSA45-25	25	650	195,000	50-13,354	49.7	82.8	1.13
-50	50	1,300	260,000	99-26,700	45.6	84	1.3
-75	75	2,000	300,000	148-39,060	44.3	86.3	1.52

(unit : mm)

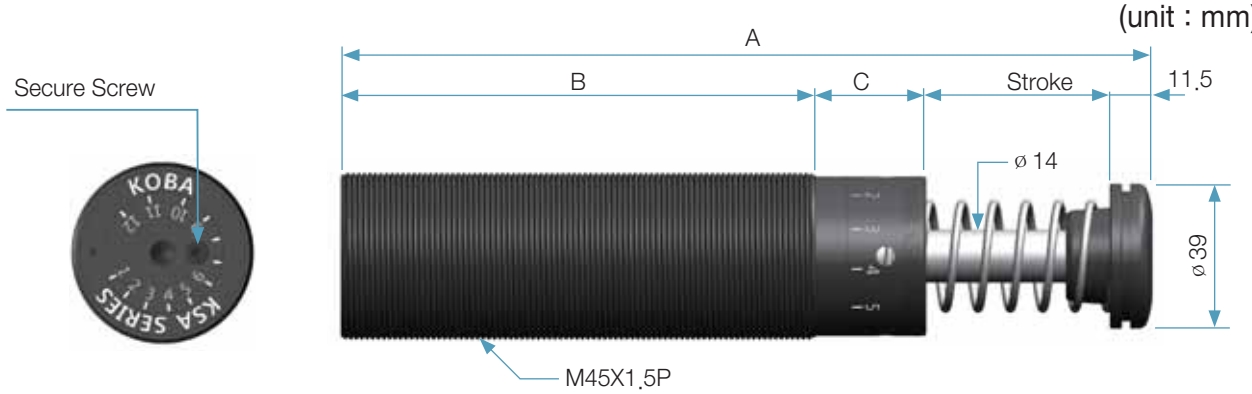

Dimensions (unit : mm)

Model	St	A	B	C
KSA45-25	25	159.5	93	30
-50	50	220.5	129	30
-75	75	292.5	168.5	37.5

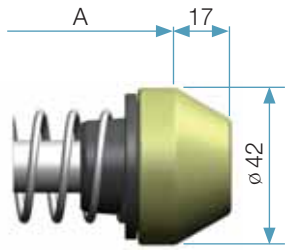

Urethane Cap

Adjustment Diagram

Accessory (unit : mm)

Clevis Mount

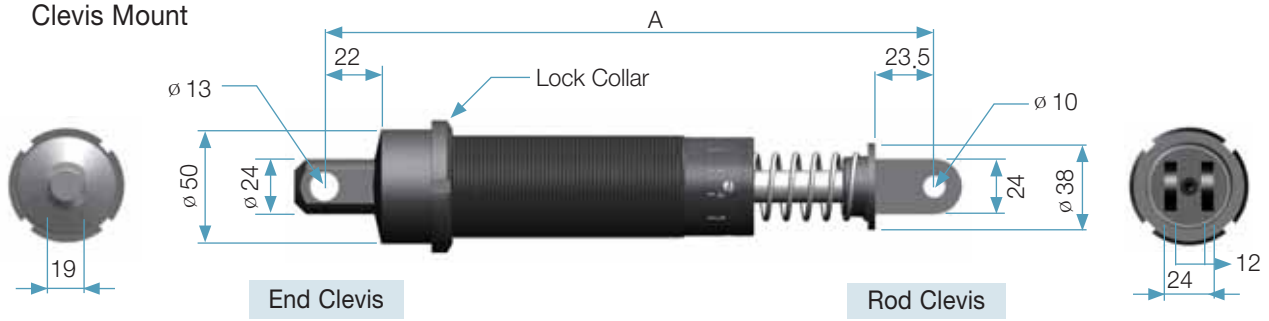

Clamp Mount

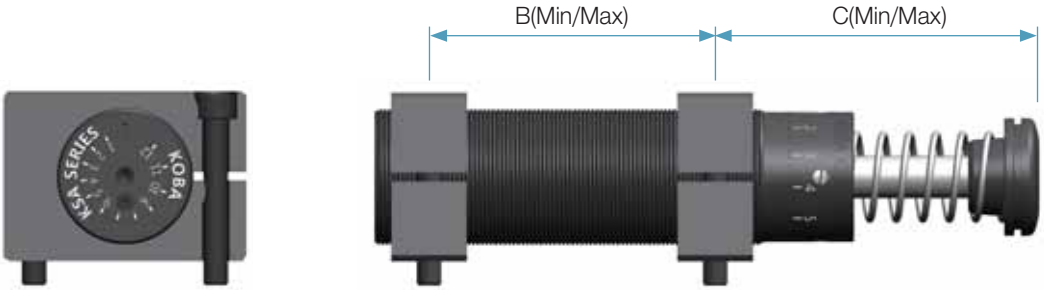

Dimensions (unit : mm)

Model	KSA45-25	KSA45-50	KSA45-75
A	210	271	343
B(Min/Max)	25/68	25/104	25/143.5
C(Min/Max)	79.5/100.5	104/143.5	129/170.75

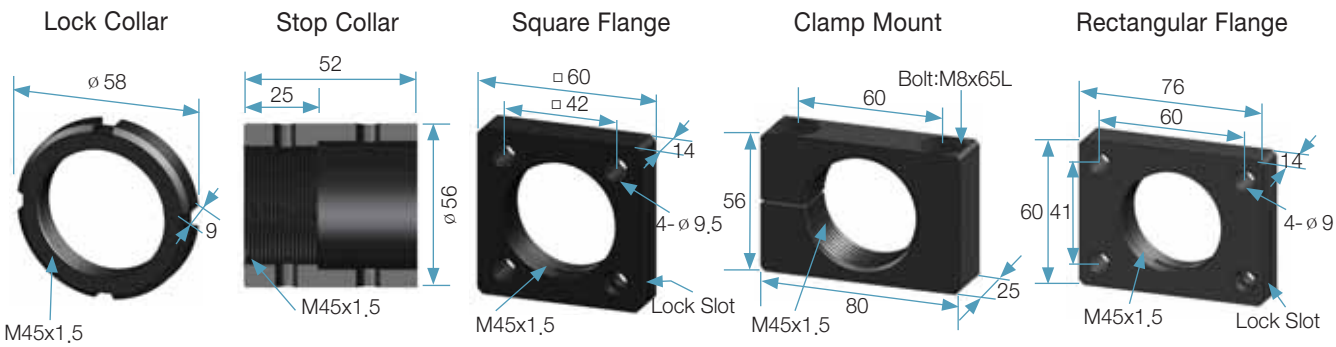

KSA 64 Series

Engineering Data

Model	Stroke (mm) S	Max.Energy / Cycle (Nm) E_T	Max.Energy /Hour (Nm/h) E_TC	Effective Weight (kg) We	Recoil Force (N)		Weight (kg)
					Ext.	Comp.	
KSA64-25	25	1,250	152,000	92-24,400	61.8	110	2.9
-50	50	2,500	248,000	185-48,800	60.8	133.2	3.3
-75	75	3,750	265,000	277-73,240	61.4	148.3	3.8
-100	100	5,000	360,000	370-97,650	59.4	160.1	4
-125	125	6,250	413,000	462-122,000	57.1	160.4	7.7
-150	150	7,500	450,000	555-146,480	51	166.8	8.9

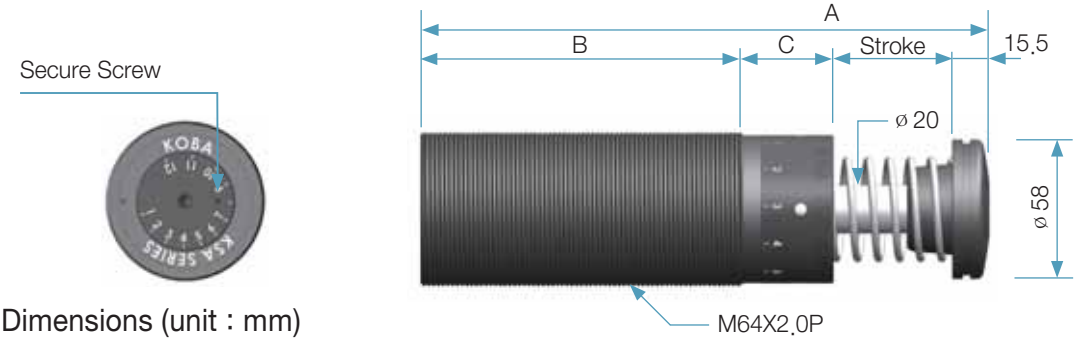

Dimensions (unit : mm)

Model	St	A	B	C
KSA64-25	25	176	97.5	38
-50	50	239	135.5	38
-75	75	309	173.5	45
-100	100	375	214.5	45
-125	125	452	256.5	55
-150	150	518.5	294.5	58.5

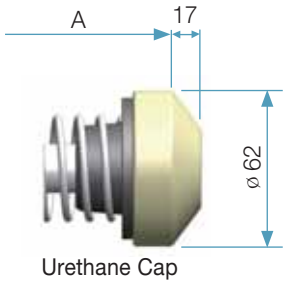

Adjustment Diagram

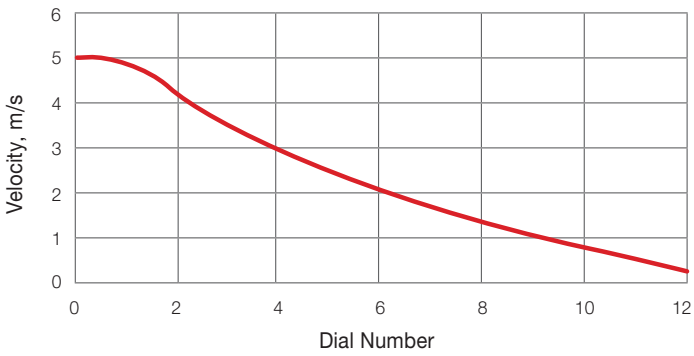

Accessory (unit : mm)

Clevis Mount

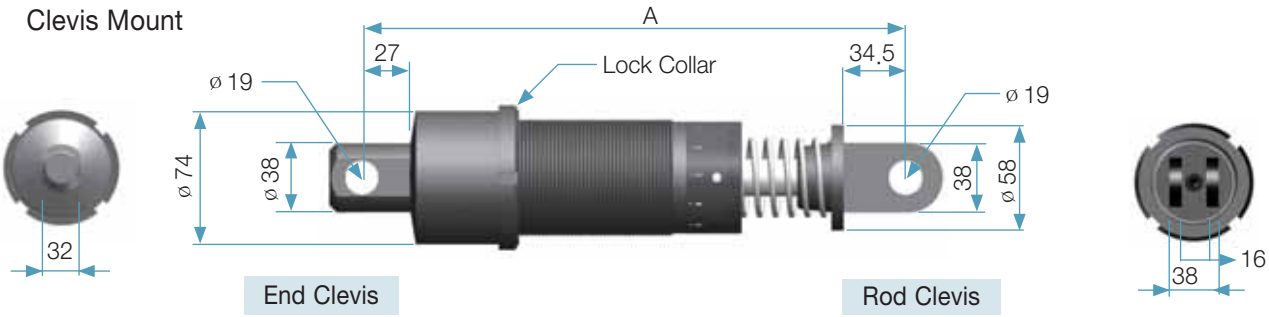

Clamp Mount

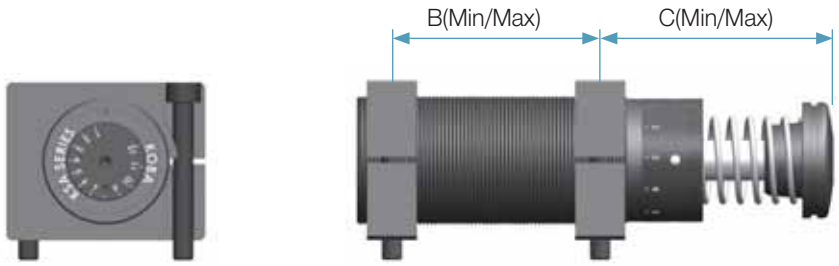

Dimensions (unit : mm)

Model	KSA64-25	KSA64-50	KSA64-75	KSA64-100	KSA64-125	KSA64-150
A	244	307	377	442	520	-
B(Min/Max)	25/72.5	25/110.5	25/148.5	25/189.5	25/231.5	25/269.5
C(Min/Max)	92.5/116.25	117.5/160.25	149.5/211.25	174.5/256.75	209.5/312.75	238/360.25

Lock Collar

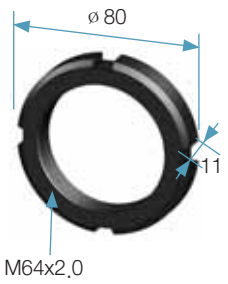

LC64

Stop Collar

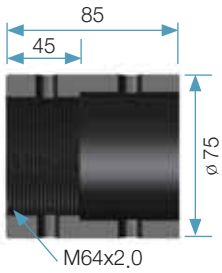

SC64

Square Flange

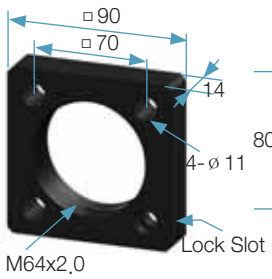

SF64

Clamp Mount

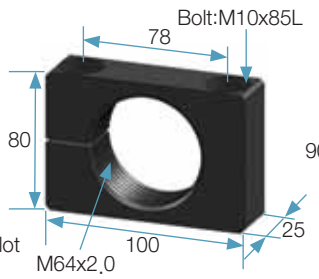

CM64

Rectangular Flange

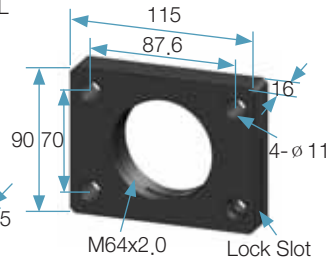

RF64

KSA 85 Series

Engineering Data

Model	Stroke (mm) S	Max.Energy / Cycle (Nm) E_T	Max.Energy /Hour (Nm/h) E_TC	Effective Weight (kg) We	Recoil Force (N)		Weight (kg)
					Ext.	Comp.	
KSA85-25	25	2,000	330,000	148-39,600	132	245.8	12.2
-50	50	4,000	462,000	296-78,100	131.6	271.7	14.4
-75	75	6,000	680,000	444-117,200	130	325.1	17
-100	100	8,000	825,000	591-156,300	125.4	327.7	20
-125	125	10,000	859,000	740-195,300	126.6	343.3	23.6
-150	150	12,000	901,000	930-220,300	126.6	386.7	28

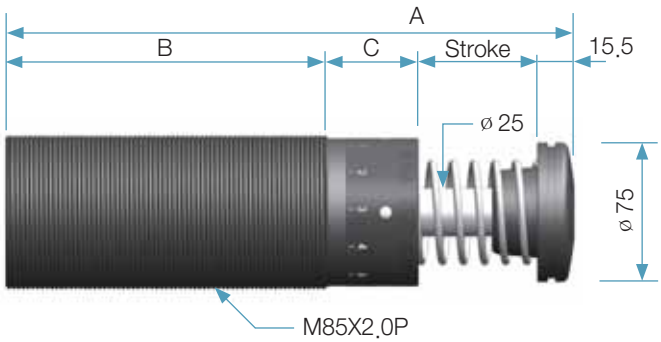

Dimensions (unit : mm)

Model	St	A	B	C
KSA85-25	25	189.5	109	40
-50	50	251	145.5	40
-75	75	314.5	180	44
-100	100	384.5	217	52
-125	125	452.5	256	56
-150	150	513.5	292	56

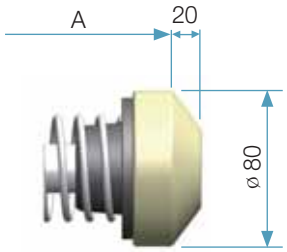

Urethane Cap

Adjustment Diagram

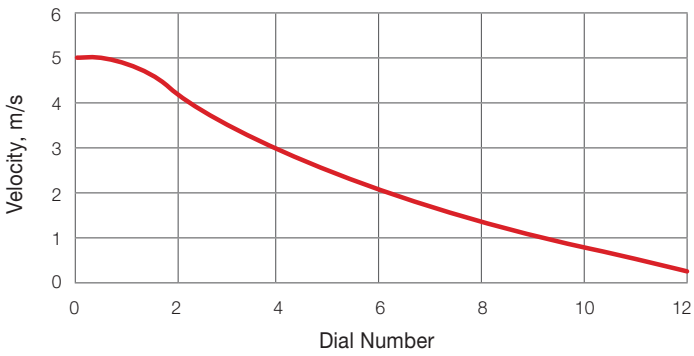

Accessory (unit : mm)

Clevis Mount

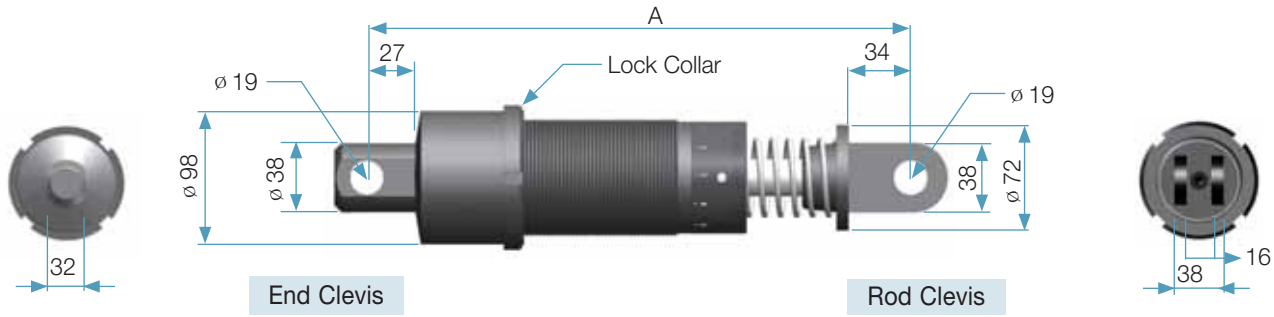

Clamp Mount

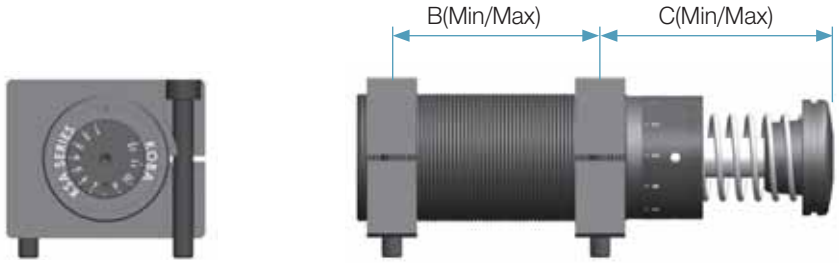

Dimensions (unit : mm)

Model	KSA85-25	KSA85-50	KSA85-75	KSA85-100	KSA85-125	KSA85-150
A	256	316	381	451	519	-
B(Min/Max)	25/79	25/114	25/150	25/187	25/226	25/262
C(Min/Max)	95.5/120	120.5/162.5	149/209.5	182.5/261	211.5/309.5	236.5/352.5

Lock Collar

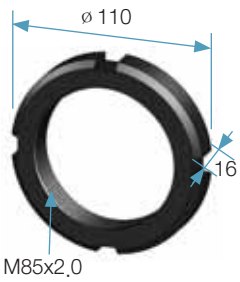

LC85

Stop Collar

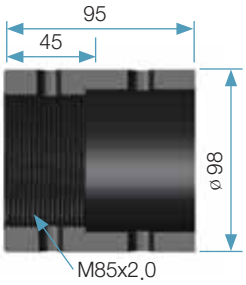

SC85

Square Flange

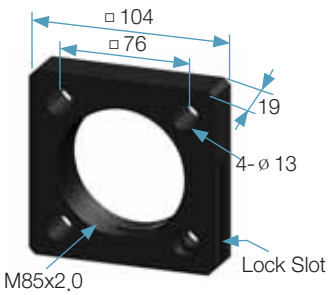

SF85

Clamp Mount

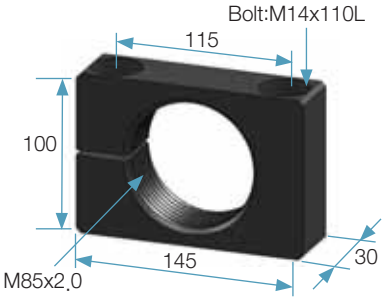

CM85

KSA Accessories Installation

NAME	Example / Description	
Lock Collar		mounting by locking 1 or 2 lock collar with recomended torque
Stop Collar + Lock Collar		Stop Collar will be adjusted to max needed stroke. Locked by 1 or 2 lock collar.
Flange Mount		Square Flange or Rectangular Flange to mount Shock Absorber in through bores.
Clamp Mount	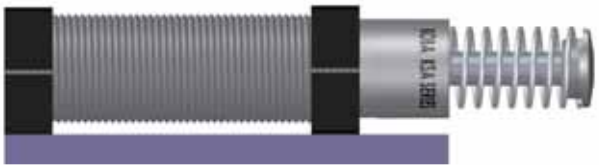	Clamp Mount is used to mount Shock Absorber on the floor.
Clevis Mount		Clevis mount - needed to connect moving load directly with the Shock Absorber

KOBA
Best Energy Absorption

KHA Series

KHA-Adjustable Series

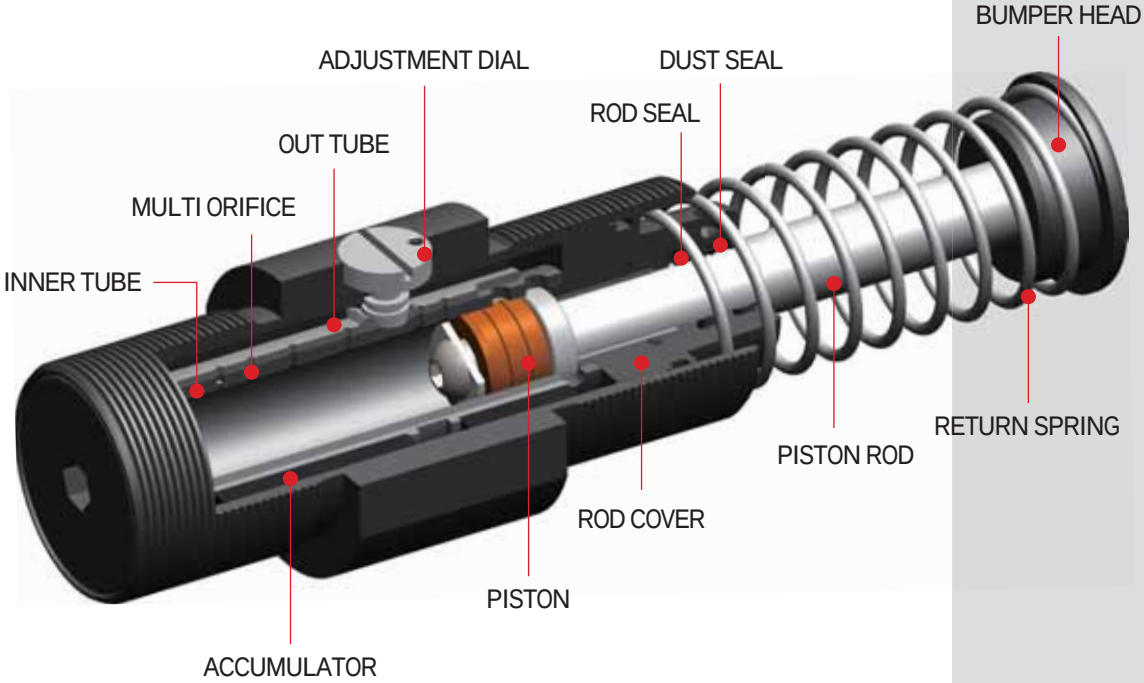

Brief Overview

- Adjustment Dial positioned in the middle of the body
- Body black zinc plated for highest corrosion resistance up to 320 hours salt spray test.
- Piston Rod special heat treated, Rod Cover, double lip seal and dust whiper
- Shock Absorber Bumper Head Urethane Cap for low impact noise
- Impact velocity
  - standard : 0.3 - 3.5 m/s
  - low velocity (LV) : 0.08 - 1.3 m/s
- Temperature range -10~80 ℃
- Option -40 ~120 ℃(with special Seal and oil).
- Application: Robot, linear movement technology, emergency stop, turntable and corner composer

KHA Series Ordering Information

KHA 42 - 50 N LV - SC

- SC: 〈 Accessory Series 〉
  - SC : Stop Collar
  - UC : Urethane Cap
  - SF : Square Flange
  - RF : Retangular Flange
  - LC : Lock Collar
  - RC : Rod Clevis
  - EC : End Clevis
  - CM : Clamp Mount
- LV: velocity(0.3~3.5m/s) / LV : low velocity(0.08~1.3m/s)
- N: surface standard black / N : nickel plated
- 50: Stroke
- 42: Body Thread Size
- KHA: KH: Series / A:adjustable

Accessory Series Charts

Accessories	Urethane Cap	Square Flange	Rectangular Flange	Lock Callar	Stop Callar	Rod Clevis	End Clevis	Clamp Mount
Symbols / Model	UC	SF	RF	LC	SC	RC	EC	CM
KHA 42 Series	●	●	●	●	●	●	●	●
KHA 64 Series	●	●	●	●	●	●	●	●
KHA 85 Series	●	●		●	●	●	●	●
KHA115 Series	●	●		●	●	●	●	●

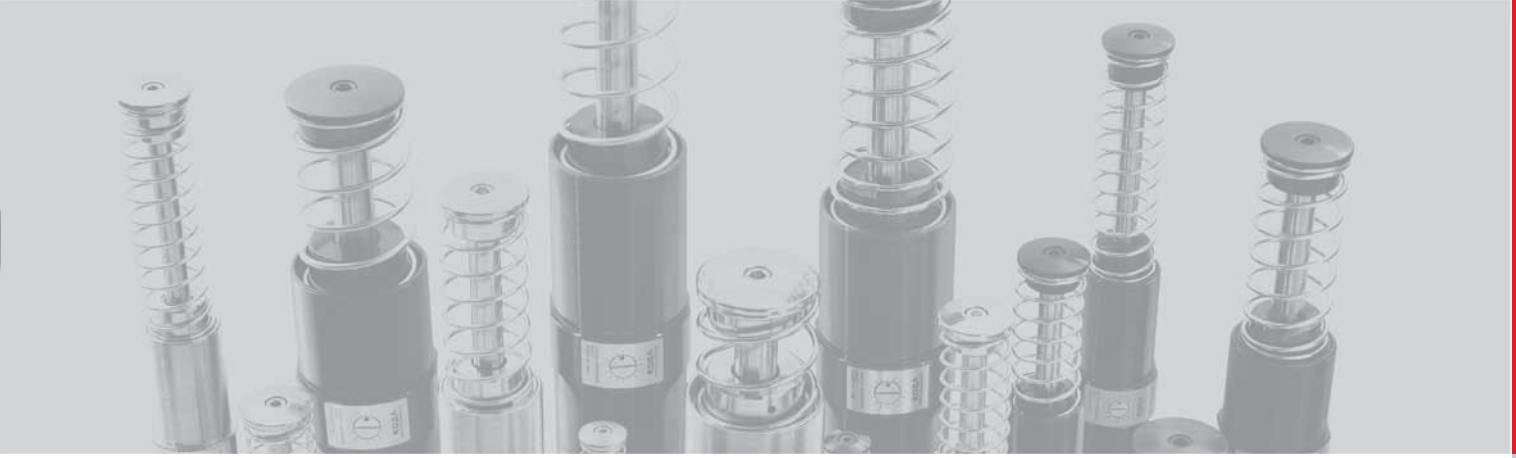

KHA 42 Series

Engineering Data

Model	Stroke (mm) S	Max.Energy / Cycle (Nm) E_T	Max.Energy /Hour (Nm/h) E_TC	Effective Weight (kg) We	Recoil Force (N) Ext.	Recoil Force (N) Comp.	Weight (kg)
KHA42-25	25	250	125,000	36-3,600	28	56	1.25
-25LV				295-52,000			
-50	50	500	166,000	45-6,150	38	86	1.4
-50LV				591-104,000			
-75	75	750	200,000	54-9,500	32	88	1.6
-75LV				887-156,000			

(unit : mm)

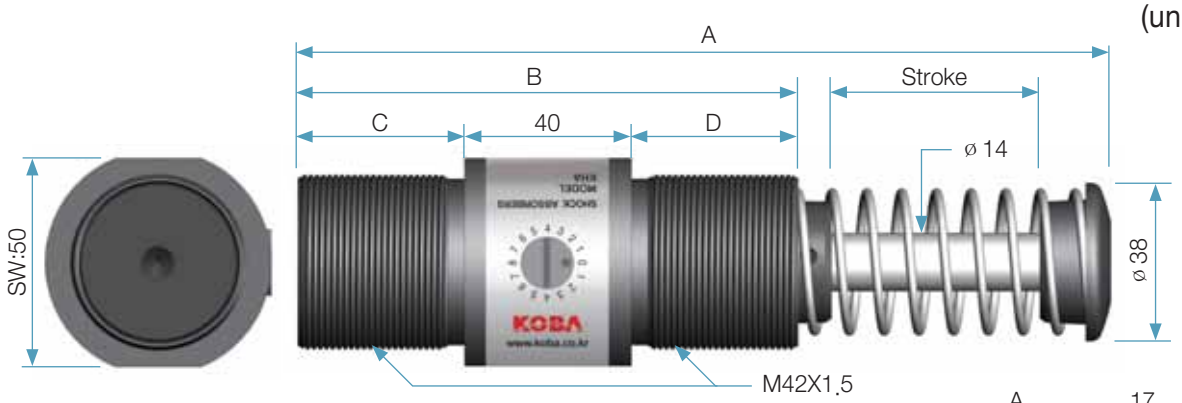

Dimensions (unit : mm)

Model	St	A	B	C	D
KHA42-25	25	145	95	28	27
-50	50	195	120	40	40
-75	75	245	145	52	53

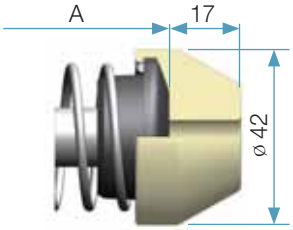

Urethane Cap

Adjustment Dial

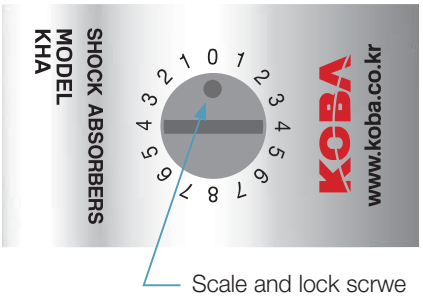

Adjustment Diagram

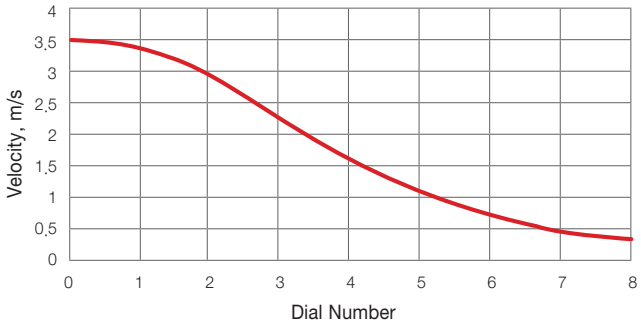

Accessory (unit : mm)

Clevis Mount

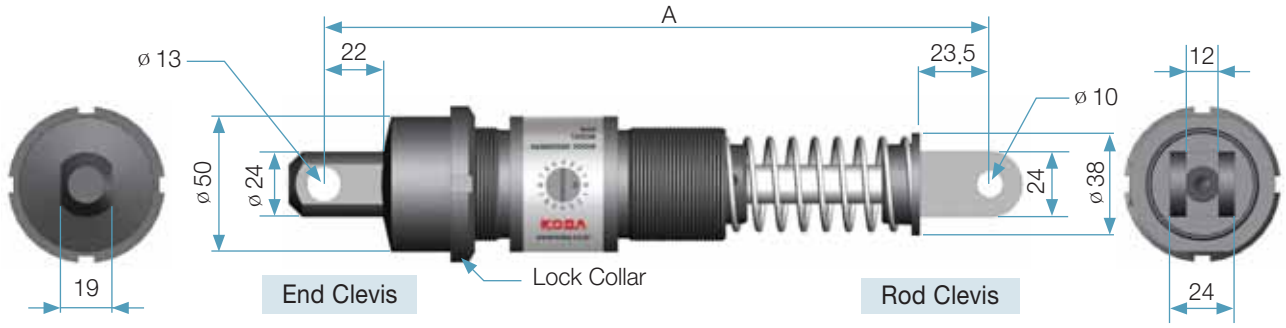

Clamp Mount

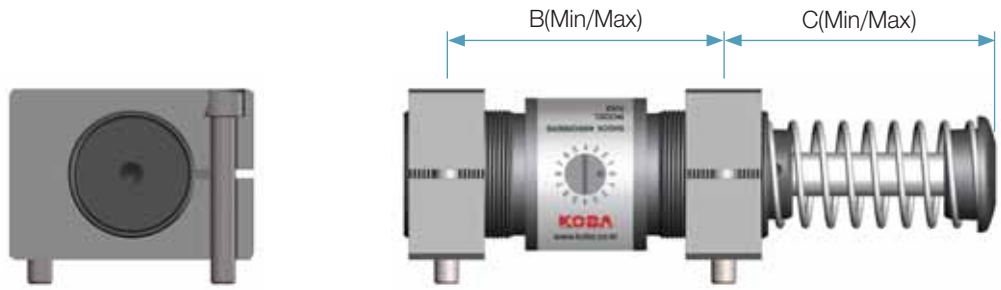

Dimensions (unit : mm)

Model	KHA42-25	KHA42-50	KHA42-75
A	200	250	300
B(Min/Max)	65/70	65/95	65/120
C(Min/Max)	62.5/64.5	87.5/102.5	117.6/145.5

Lock Collar

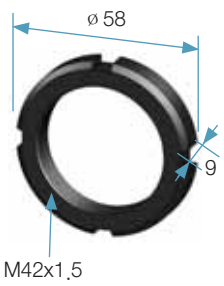

LC42

Stop Collar

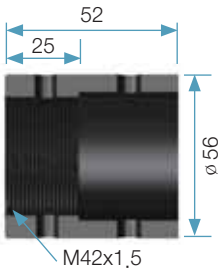

SC42

Square Flange

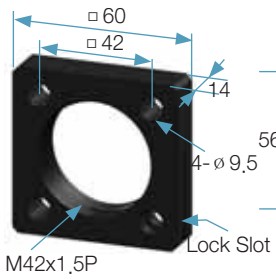

SF42

Clamp Mount

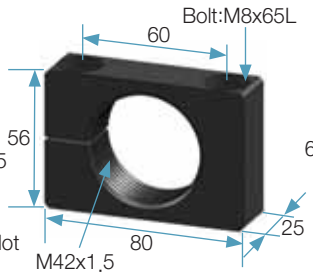

CM42

Rectangular Flange

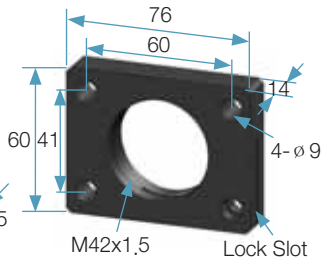

RF42

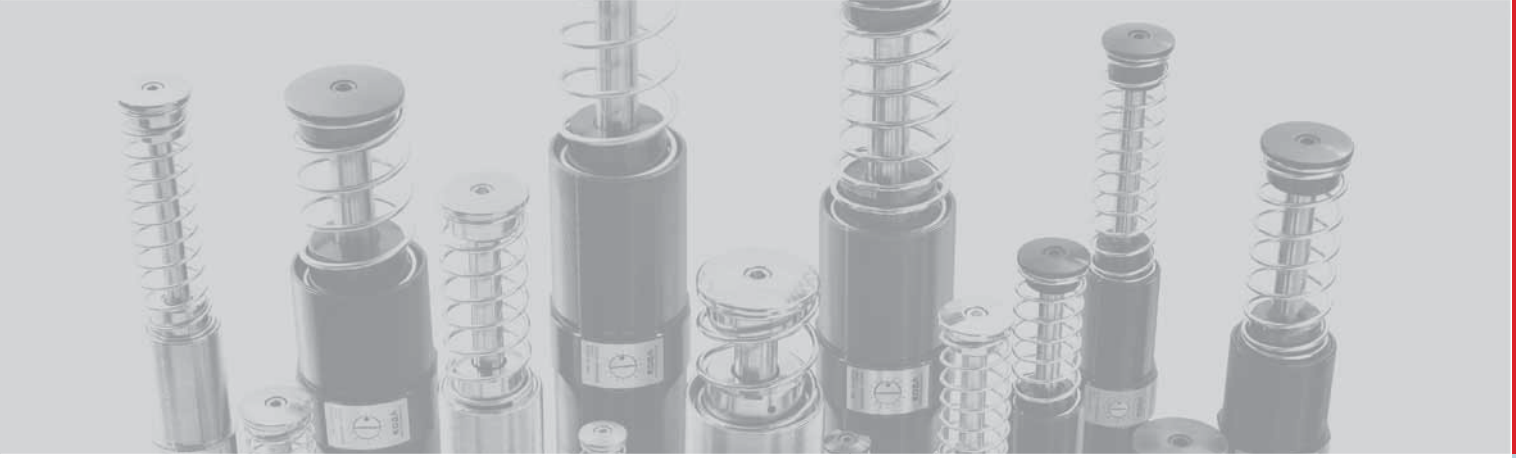

KHA 64 Series

Engineering Data

Model	Stroke (mm) S	Max.Energy / Cycle (Nm) E_T	Max.Energy /Hour (Nm/h) E_TC	Effective Weight (kg) We	Recoil Force (N) Ext.	Recoil Force (N) Comp.	Weight (kg)
KHA64-50	50	1,300	270,000	82-12,600	65	148	3.7
-50LV				4,062.5-277,500			
-100	100	2,600	360,000	115-17,000	45	157	4.5
-100LV				8,125-555,000			
-150	150	3,900	420,000	140-22,000	47	199	5.3
-150LV				12,187.5-832,500			

(unit : mm)

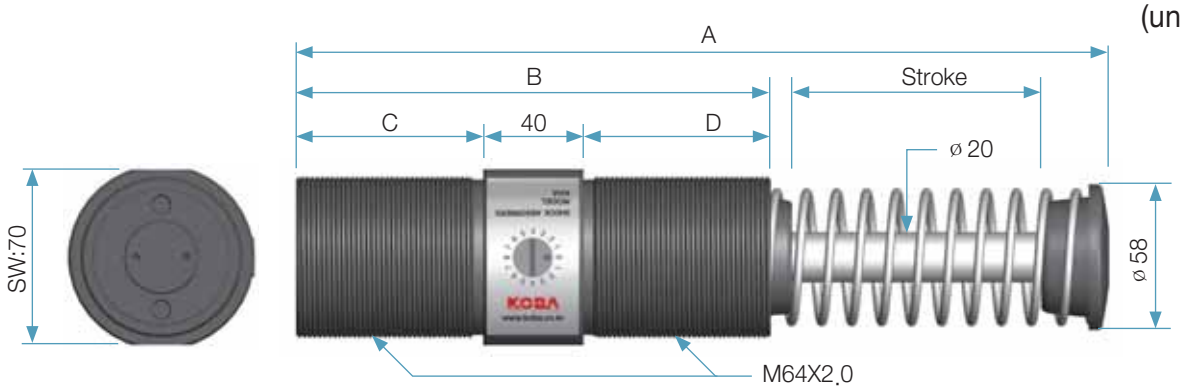

Dimensions (unit : mm)

Model	St	A	B	C	D
KHA64-50	50	225	140	50	50
-100	100	327	190	75	75
-150	150	455	240	100	100

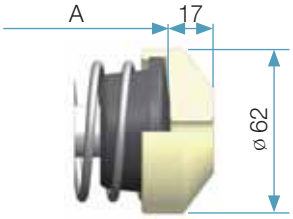

Urethane Cap

Adjustment Dial

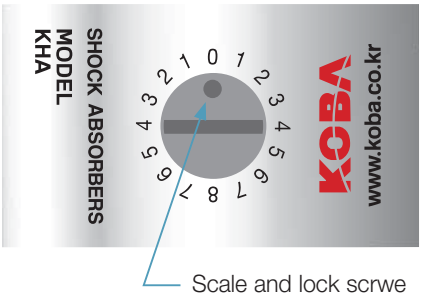

Adjustment Diagram

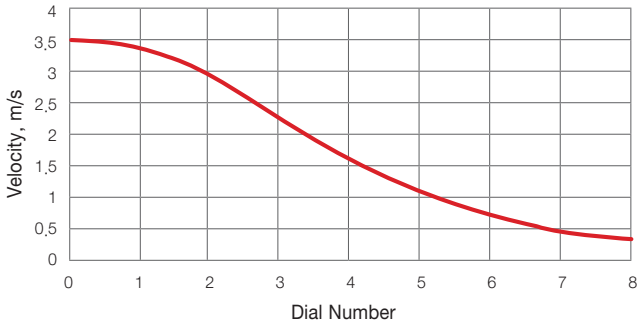

Accessory (unit : mm)

Clevis Mount

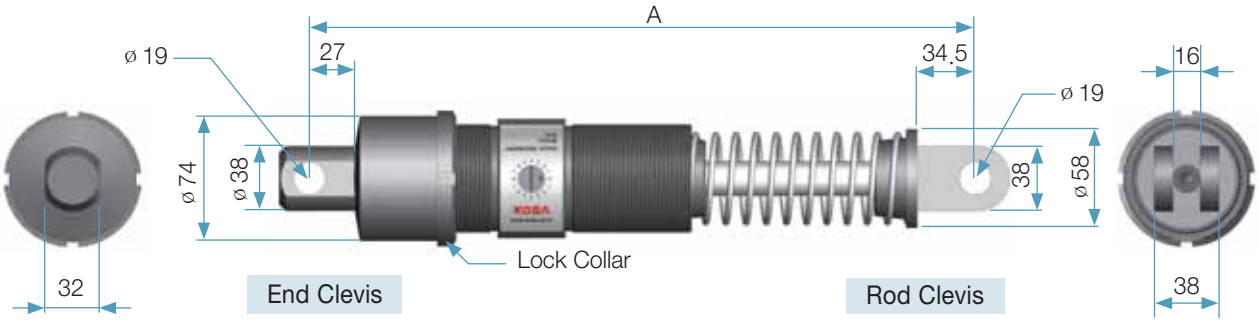

Clamp Mount

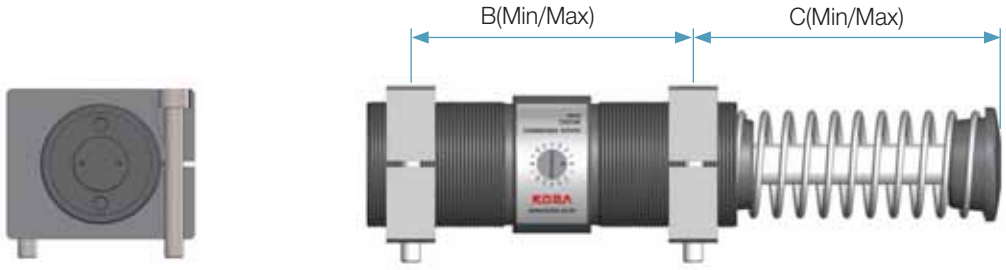

Dimensions (unit : mm)

Model	KHA64-50	KHA64-100	KHA64-150
A	305	409	534
B (Min/Max)	65/115	65/165	65/215
C (Min/Max)	97.5/122.5	147.5/197.5	197.5/272.5

Lock Collar

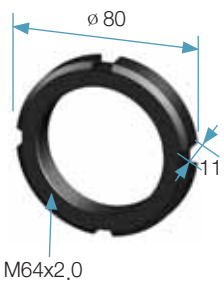

LC64

Stop Collar

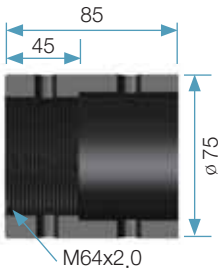

SC64

Square Flange

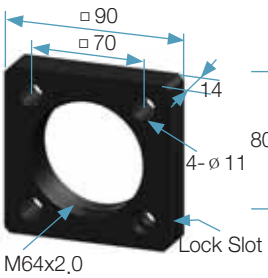

SF64

Clamp Mount

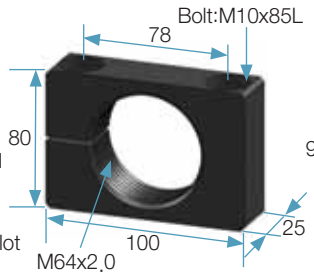

CM64

Rectangular Flange

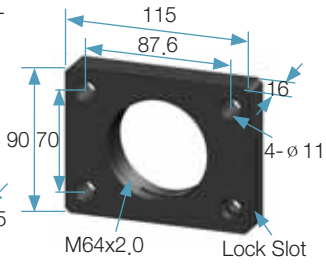

RF64

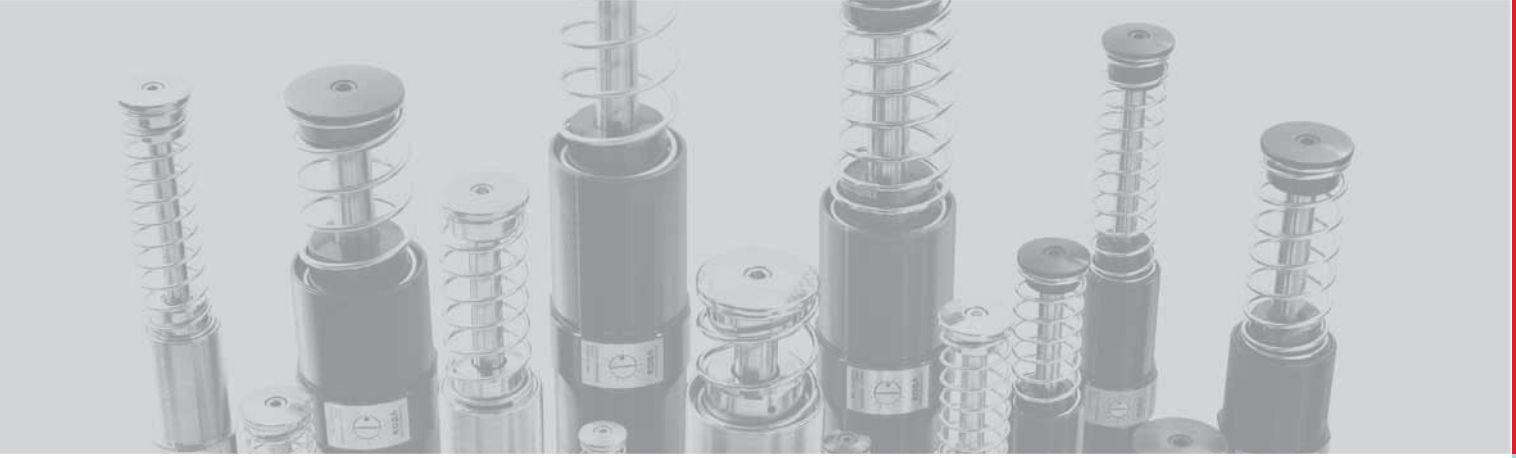

KHA 85 Series
Engineering Data

Model	Stroke (mm) S	Max.Energy / Cycle (Nm) E_T	Max.Energy /Hour (Nm/h) E_TC	Effective Weight (kg) We	Recoil Force (N)		Weight (kg)
					Ext.	Comp.	
KHA85-50	50	2,300	370,000	200-37,000	148	315	6.4
-90	90	4,000	650,000	230-40,000	121	365	7.6
-125	125	5,700	930,000	300-43,000	114	365	8.6
-165	165	7,300	1,210,000	360-45,000	98	429	9.8

(unit : mm)

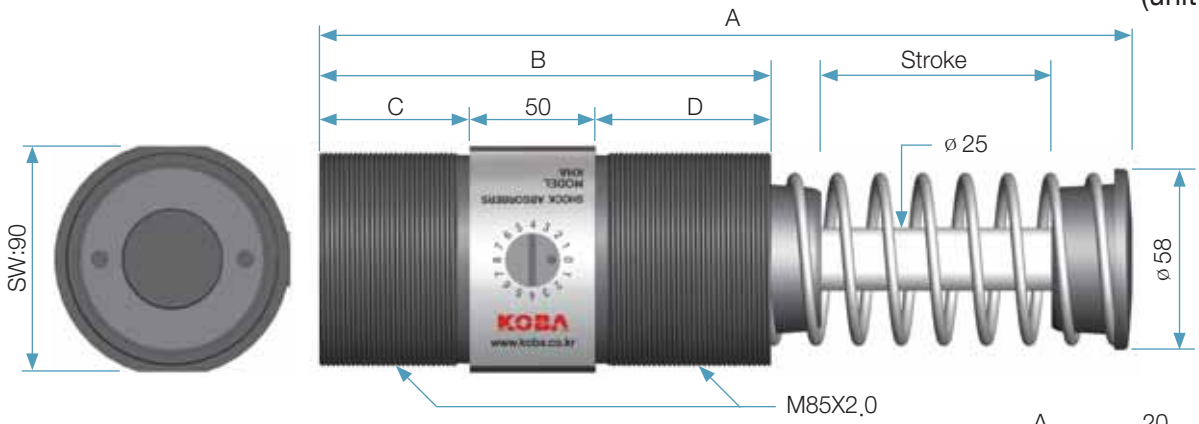

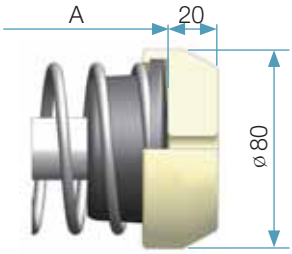

Urethane Cap

Dimensions (unit : mm)

Model	St	A	B	C	D
KHA85-50	50	245	140	42	48
-90	90	325	180	60	70
-125	125	400	216	82	84
-165	165	494	256	106	100

Adjustment Dial

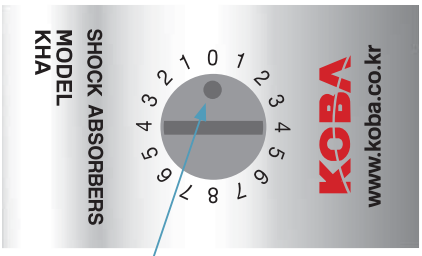

Scale and lock scrwe

Adjustment Diagram

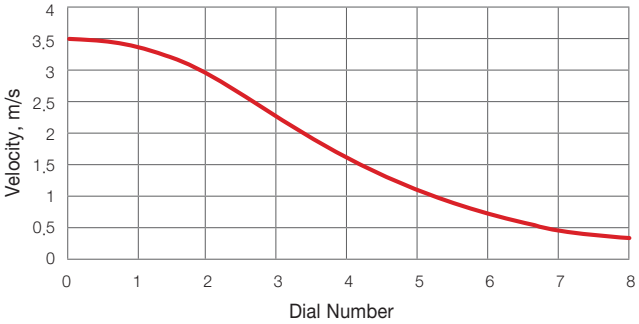

Accessory (unit : mm)

Clevis Mount

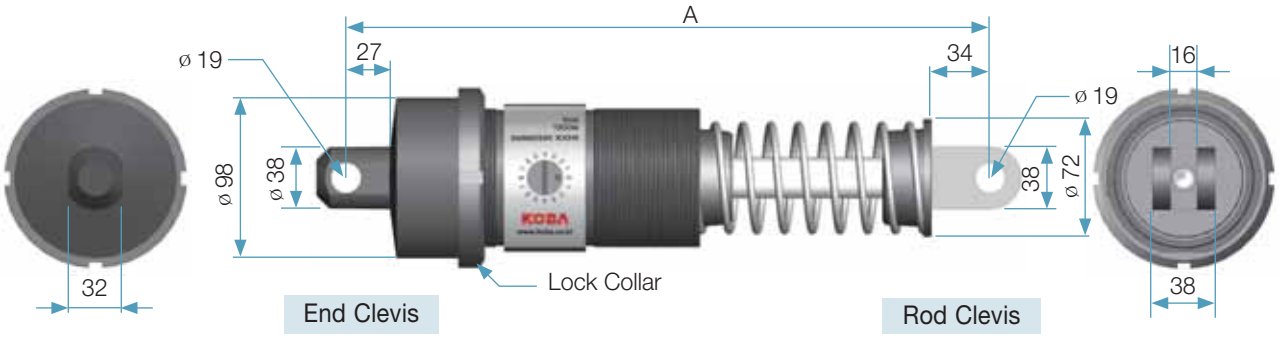

Clamp Mount

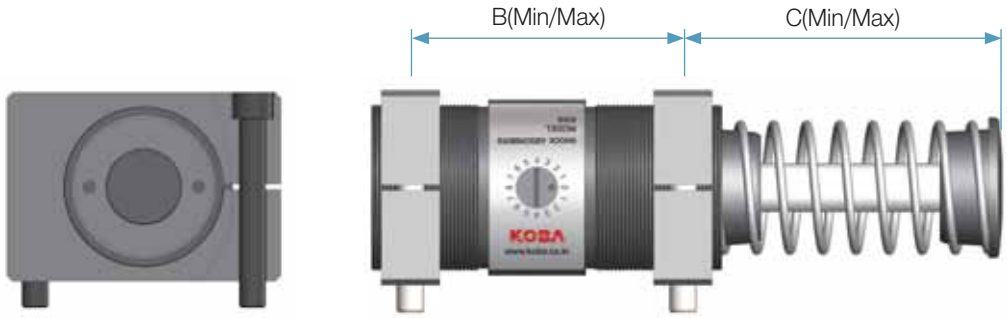

Dimensions (unit : mm)

Model	KHA85-50	KHA85-90	KHA85-125	KHA85-165
A	325	405	480	575
B (Min / Max)	80/110	80/150	80/186	80/226
C (Min / Max)	120/138	160/200	195/249	220/290

Lock Collar

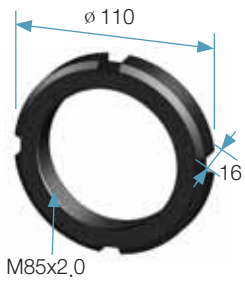

LC85

Stop Collar

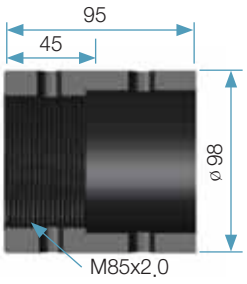

SC85

Square Flange

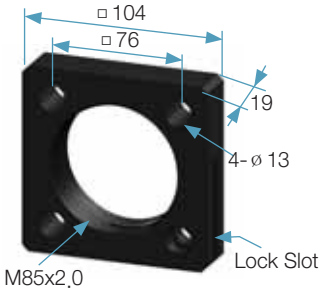

SF85

Clamp Mount

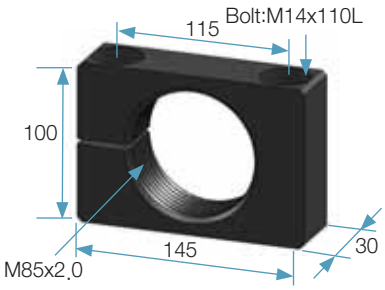

CM85

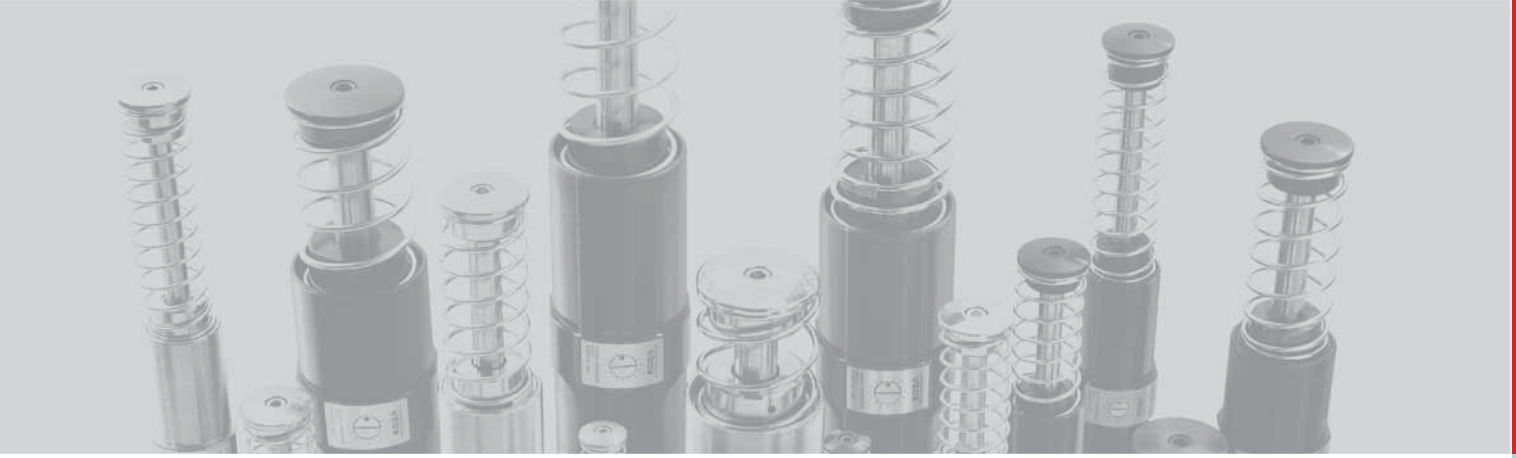

KHA 115 Series

Engineering Data

Model	Stroke (mm) S	Max.Energy / Cycle (Nm) E_T	Max.Energy /Hour (Nm/h) E_TC	Effective Weight (kg) We	Recoil Force (N)		Weight (kg)
					Ext.	Comp.	
KHA115-50	50	3,700	1,501,000	370-44,000	187	427	16
-100	100	7,400	1,805,000	370-57,000	178	482	19
-150	150	11,100	2,100,000	370-89,000	185	538	21
-200	200	14,800	2,405,000	390-118,000	185	665	31
-250	250	18,500	2,710,000	440-145,000	184	649	34

(unit : mm)

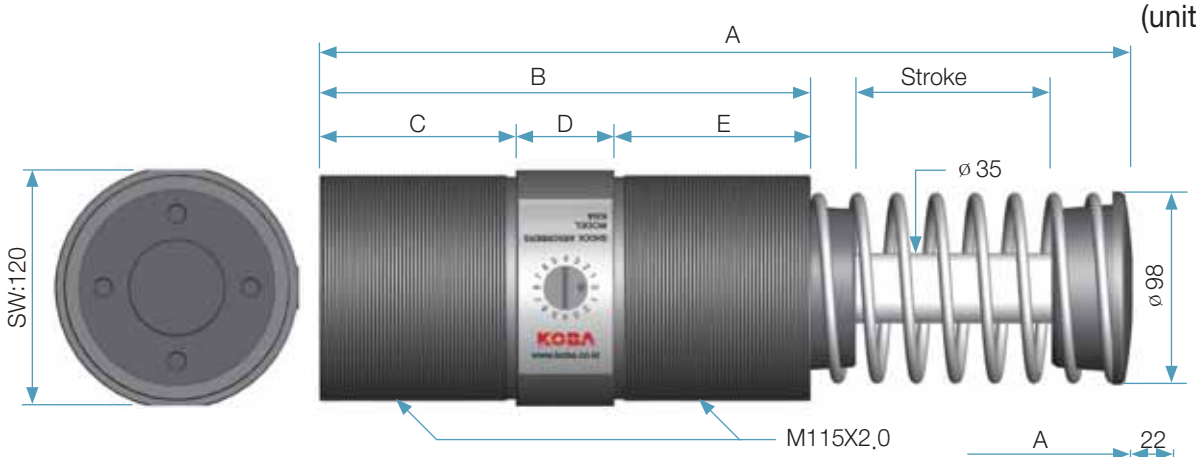

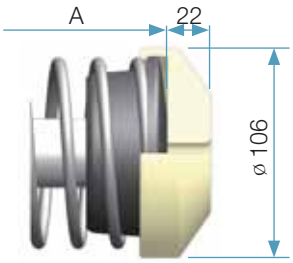

Urethane Cap

Dimensions (unit : mm)

Model	St	A	B	C	D	E
KHA115-50	50	314	200	75	50	75
-100	100	414	250	100	50	100
-150	150	514	300	125	50	125
-200	200	644	350	150	50	150
-250	250	744	410	180	60	170

Adjustment Dial

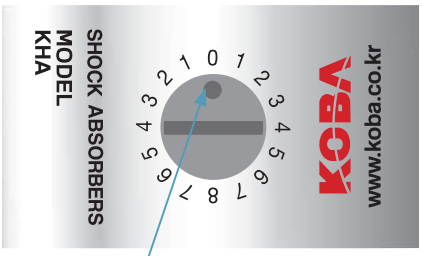

Adjustment Diagram

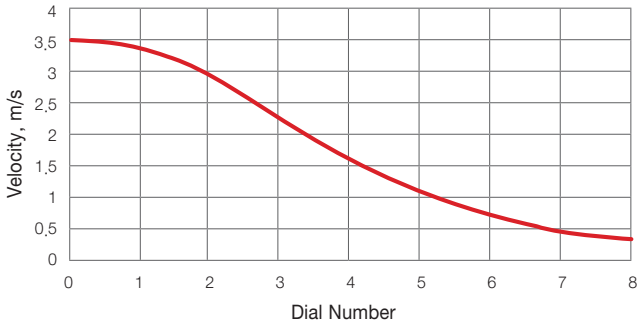

Accessory (unit : mm)

Clevis Mount

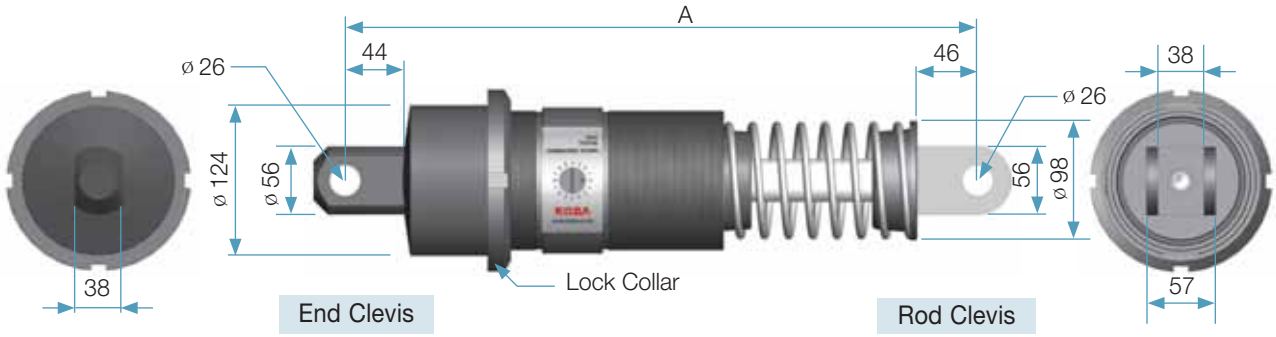

Clamp Mount

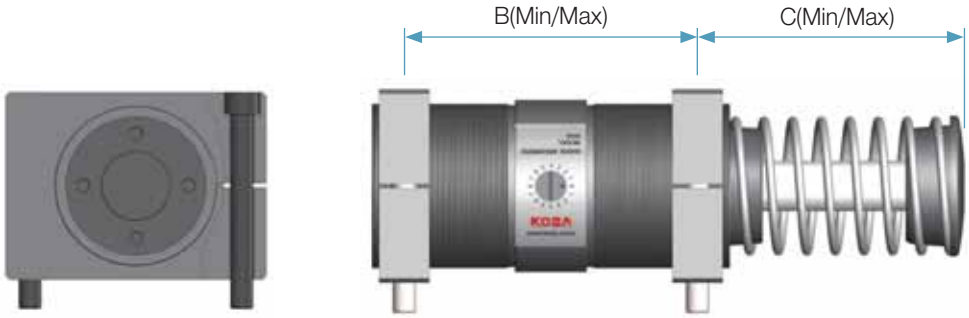

Dimensions (unit : mm)

Model	KHA115-50	KHA115-100	KHA115-150	KHA115-200	KHA115-250
A	430	535	635	760	865
B Min/Max	80/170	80/220	80/270	80/320	80/370
C Min/Max	129/174	179/249	229/324	279/399	329/479

Lock Collar

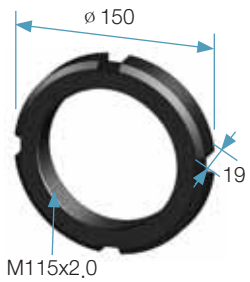

LC115

Stop Collar

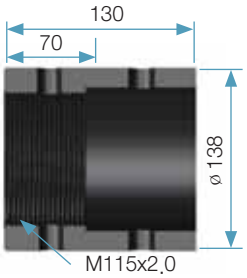

SC115

Square Flange

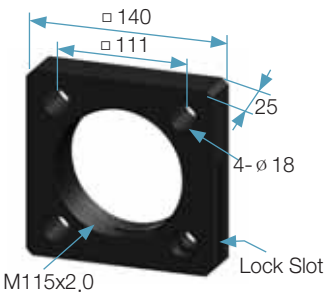

SF115

Clamp Mount

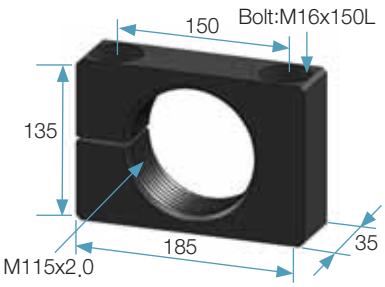

CM115

KHA Accessories Installation

NAME	Installation	Remark
Lock Collar		Installation is simply done by fastening Lock Collar. This is basic installation.
Stop Collar + Lock Collar		Stop Collar guarantees accurate stopping and positioning and protects "Bottoming out" of Piston.
Flange Mount		Use to Square Flange or Rectangular Flange to conveniently fix Shock Absorber.
Clamp Mount		Clamp mount is used in horizontal installation usually specially if the shock absorber is long.
Clevis Mount		Clevis mount is used in rotation movement to absorb the collision force indirectly and protect from unbalanced shock absorption.

Air Oil Tank & Check Valve Series

KOBA
Best Energy Absorption

When the Air Oil Tank is used, it is more efficient to discharge the thermal energy in Shock Absorber. It makes the usage frequency per hour and lifetime of Shock Absorber increased. It also makes possible to control the returning velocity of Shock Absorber. When you use Air Oil Tank, it is not need to use Return spring.

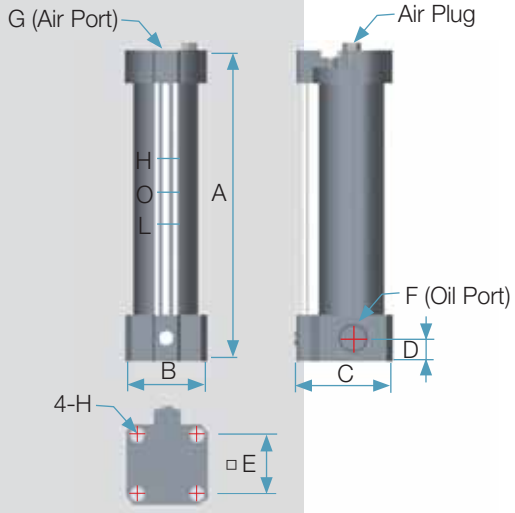

- Operation Pressure : 3 ~ 7 bar (Max 10bar).
- Operation Temperature : (-10~80℃).
- Usage : Fill the oil between 0 to L in the gage of Air Oil Tank.
- Precautions
  1. Air Oil Tank must be installed in higher position than Shock Absorber.
  2. Vent the air from the inside of device before operation.
  3. When you check the Air Oil Tank, you must remove the pressure from it by check valve.

Dimension (unit : mm)

MODEL	A	B	C	D	E	F	G	H	MODEL
KHO63-100	286	88	105	25	64	PT3/4	PT3/8	15	KHA42, KHA64 Series
KHO100-150	398	135	153	30	93	PT3/4	PT3/8	15	KHA85, KHA115 Series

Check Valve

Check Valve control the oil flow according to direction of oil between Shock Absorber and Air Oil Tank.

MODEL	A	B	C
KC 1/4	35	24	PT 1/4
KC 3/8	35	24	PT 3/8
KC 1/2	40	40	PT 1/2
KC 3/4	60	48	PT 3/4

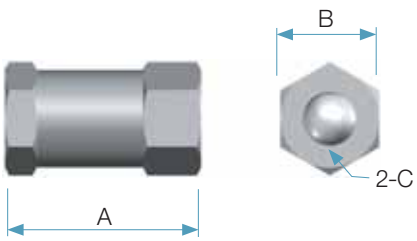

Application

Circuit	
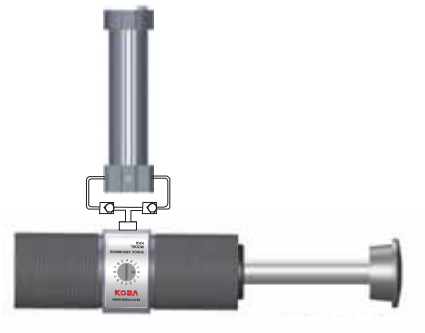	Consist of one Oil inlet controlled by a check valve. Oil flow in circuit
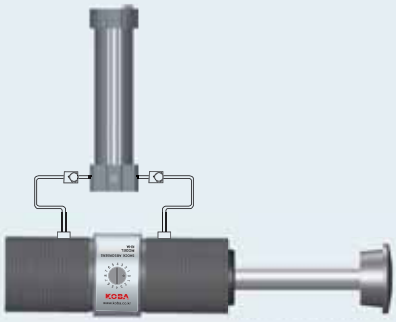	Consist of two oil connections for highest efficient down cooling. For high speed application.
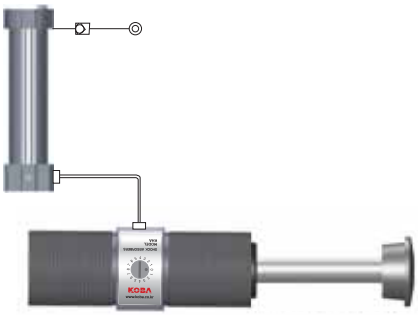	Shock Absorber will be returned immediately through air pressure.
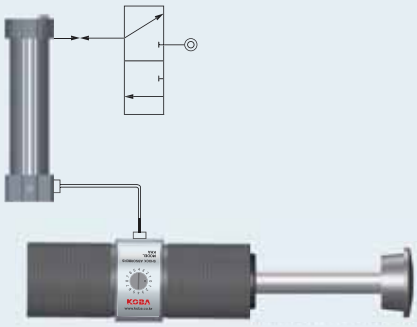	Shock Absorber return speed will be controlled.

KHG Series
Hydraulic Buffer

KOBA
Best Energy Absorption

KHG Series for heavy industries

When the moving load is collided to bumper head, the piston rod enters inner tube according to stroke and check valve is closed with the oil chamber compressed. The oil in chamber is absorbed the impact force by discharging through multiple orifice. Also piston rod inside body makes the oil push chamber piston to compress gas chamber according to stroke so the oil mutually interacts with nitrogen gas to absorb shock efficiently and smoothly. After absorption of impact force, compressed gas chamber deliver the force to oil chamber and the check valve open so the piston rod is return.

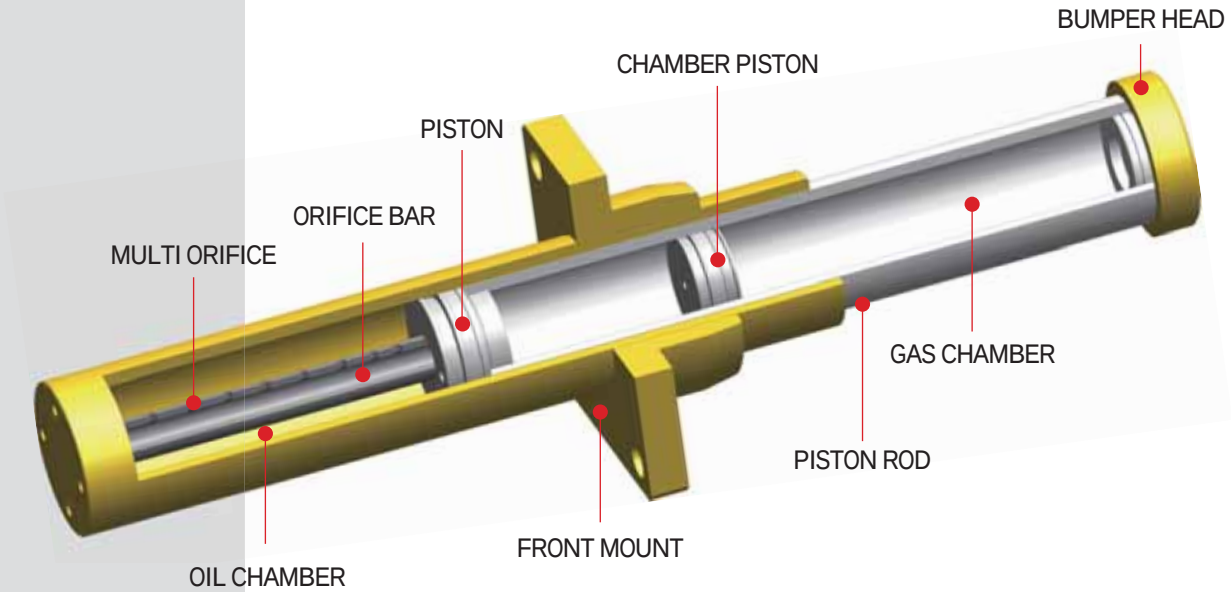

Characteristic

KHG buffer safely protect heavy machinery and equipment during transfer of heavy loads. The high-capcity buffer are individually designed to decelerate moving loads under various conditions in compliance with industry mandated standards.

- Compact design for low installation space with highest energy absorption capcity up to 500 kNm
- Double damping technology : Oil + Nitrogen Gas
- Temperature range (-10~80℃), Special (-30~100℃)
- Return of piston rod : internal Nitrogen Gas chamber
- Piston Rod : Hard Chrome(over 25㎛)
- Body : Epoxy Paint Coatings
- Aplication : harbour cranes, rail industry, emergency stop heavy mass

Comparision Damping

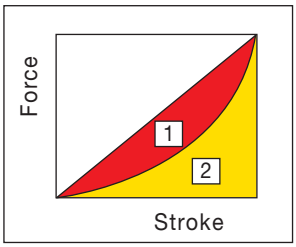

Rubber Damping
1. Low damping
2. High spring

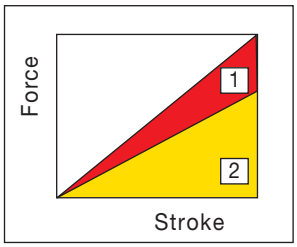

Spring Damping
1. Low damping
2. High spring

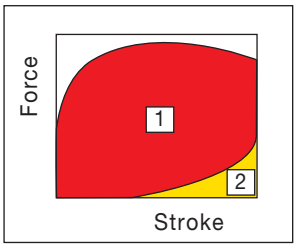

Hydraulic Buffer
1. Maximum damping
2. Low gas spring

absorption
force

KHG Series Ordering Information

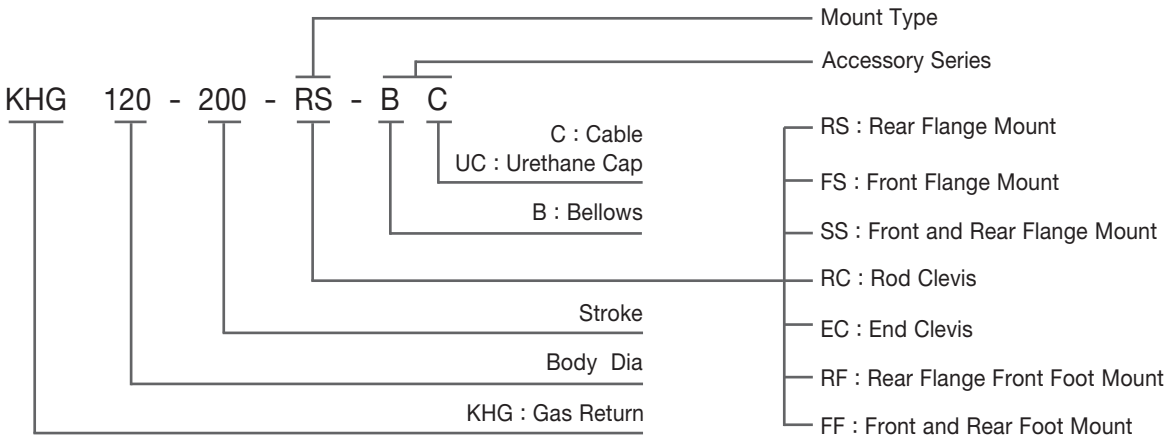

Accessory

Bellows Cover

Clevis Mounting

Front & Rear Safety Cable

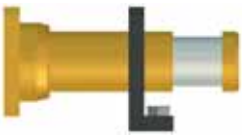

Rear Mount + Front Foot Mount

Special Order

- Temperature : -30~100℃
- Special Coatings
- Body Chrome Plating
- Stainless Steel
- Special Head

Formulae for selection model of Shock Absorber

1. Symbols

Symbol	Unit	Description
E_K	kJ	Kinetic Energy
E_W	kJ	Work Energy
E_T	kJ	Total Energy
E_TC	kJ/h	Total Energy Absorbed Per Hour
F_S	kN	Maximum Buffer Force
V	m/s	Impact Velocity
V_E	m/s	Effective Velocity
S	m	Buffer Stroke
S_D	m/s^2	Deceleration
C	Cycle/h	Cycle Per Hour
H	m	Drop Height
p	bar	Operation Pressure
P	kW	Motor Power
g	m/s^2($9.8m/s^2$)	Accelleration
n	-	Min. Efficiency

▪ 1kgf = 9.81N , 1Nm = 1J , 1MPa = 10bar = 10.2kg/cm^2 , 1g = 9.8m/s^2

2. Formula

$$E_K = \frac{W \cdot V^2}{2} \quad E_TC = E_T \cdot C \quad E_T = E_K + E_W \quad E_W = F \times S \quad F_M = \frac{E_K}{S \cdot 0.8} \quad S_D = \frac{V_E^2}{2 \cdot S \cdot 0.8} \quad S \geq \frac{V^2}{2 \cdot S_D \cdot 0.8}$$

3. Calculation examples

Moving Weight	Example	Buffer Model	
a) V=0.6m/s W=80 ton 	$E_K = \frac{W \cdot V^2}{2} = \frac{80 \times 0.6^2}{2} = 14.4kJ$ $E_T = E_K$ $F_S = \frac{E_T}{S \cdot 0.8} = \frac{14.4}{0.15 \times 0.8} = 120kN$ $V_E = 0$ $S_D = \frac{V^2}{2 \cdot S \cdot 0.8} = \frac{0.6^2}{2 \times 0.15 \times 0.8} = 1.5m/s^2$ $S = \frac{V^2}{2 \cdot S_D \cdot 0.8} = \frac{0.6^2}{2 \times 1.5 \times 0.8} = 0.15m = 150mm$	pre-selected	KHG85-150 Stroke : 150
		final selection	KHG85-150

Moving Weight	Example	Buffer Model	
b) V =1.2m/s W=200 ton P =20kW 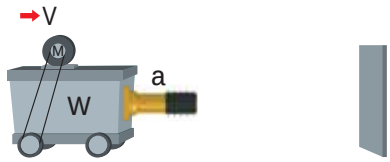	$E_K=\frac{W\cdot V^2}{2}=\frac{200\times1.2^2}{2}=144kJ$ $F=\frac{2.5\cdot P}{V}=\frac{2.5\times20}{1.2}=41.7kN$ $E_W=F\cdot S=41.7\times0.3=12.5kJ$ $E_T=E_K+E_W=144+12.5=156.5kJ$ $F_S=\frac{E_T}{S\cdot0.8}=\frac{156.5}{0.3\times0.8}=652kN$	pre-selected	KHG140-300 Stroke : 300
		final selection	KHG140-300
c) V =1.8m/s W=150 ton 	$E_K=\frac{0.5\cdot W\cdot V^2}{2}=\frac{0.5\cdot150\cdot1.8^2}{2}=121.5kJ$ $E_T=E_K$ $F_S=\frac{E_T}{S\cdot0.8}=\frac{121.5}{0.4\times0.8}=379.69\,kN$ $V_E=\frac{V}{2}=\frac{1.8}{2}=0.9m/s$ $S_D=\frac{V_E^2}{2\cdot S\cdot0.8}=\frac{0.9^2}{2\times0.4\times0.8}=1.27m/s^2$	pre-selected	KHG130-400 Stroke : 400
		final selection	KHG130-400
d) V_1=1.0m/s W_1=180 ton V_2=0.6m/s W_2=250 ton 	$E_K=\frac{W_1\cdot W_2(V_1+V_2^2)}{2(W_1+W_2)}=\frac{180\times250(0.1+0.6)^2}{2(180+250)}=133.95kJ$ $E_T=E_K$ $F_S=\frac{E_T}{S\cdot0.8}=\frac{133.95}{0.5\times0.8}=334.88\,kN$ $V_E=V_1+V_2=1.0+0.6=1.6m/s$ $S_D=\frac{V_E^2}{2\cdot S\cdot0.8}=\frac{1.6^2}{2\times0.5\times0.8}=3.2\,m/s^2$	pre-selected	KHG120-500 Stroke : 500
		final selection	KHG120-500
e) V_1=1m/s W_1=220 ton V_2=0.7m/s W_2=260 ton 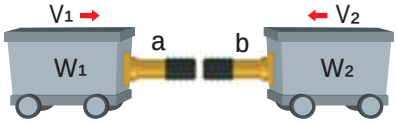	$E_K=\frac{W_1\cdot W_2(V_1+V_2)^2}{4(W_1+W_2)}=\frac{220\times260(1+0.7)^2}{4(220+260)}=86kJ$ $E_T=E_K$ $F_S=\frac{E_T}{S\cdot0.8}=\frac{86}{0.25\times0.8}=430.49\,kN$ $V_E=\frac{V_1+V_2}{2}=\frac{1+0.7}{2}=0.85m/s$ $S_D=\frac{V_E^2}{2\cdot S\cdot0.8}=\frac{0.85^2}{2\times0.25\times0.8}=1.806\,m/s^2$	pre-selected	KHG120-250 Stroke : 250
		final selection	KHG120-250
f) W=2.5 ton H =0.4m 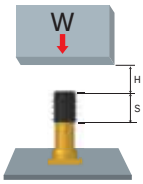	$E_K=g\cdot W\cdot H=9.81\times2.5\times0.4=9.81kJ$ $E_W=W\cdot g\cdot S=2.5\times9.81\times0.15=3.67kJ$ $E_T=E_K+E_W=9.81+3.67=13.48kJ$ $V=\sqrt{2\cdot g\cdot H}=\sqrt{2\times9.81\times0.4}=2.8m/s$ $F_S=\frac{E_T}{S\cdot0.8}=\frac{13.48}{0.15\times0.8}=112.33kN$	pre-selected	KHG85-150 Stroke : 150
		final selection	KHG85-150

KHG 65 Series
Engineering Data

Model	Stroke (mm) S	Max.Energy / Cycle (kJ) E_T	Max.Energy / Hour (kJ/h) E_TC	Max Buffer Force (kN) F_S	Recoil Force (kN)		Max Side Load Angle (°)		Weight (kg)
					Ext	Comp	R Type	F Type	
KHG65-25	25	2	100	100		3.2	3.5	3.5	6
-50	50	4	200	100		4.7	3.5	3.5	7
-75	75	6	300	100		5.3	3	3	8
-100	100	8	400	100	1.0	6.6	3	3	9
-125	125	10	500	100		6.6	2.5	2.5	10
-150	150	12	600	100		6.6	2	2	11
-200	200	16	800	100		9.0	2	2	12

Rear Mount

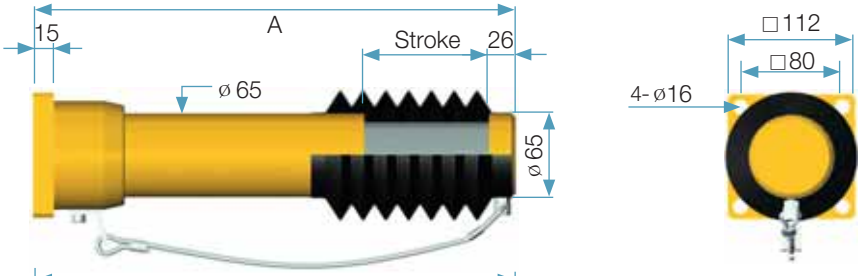

Front Mount

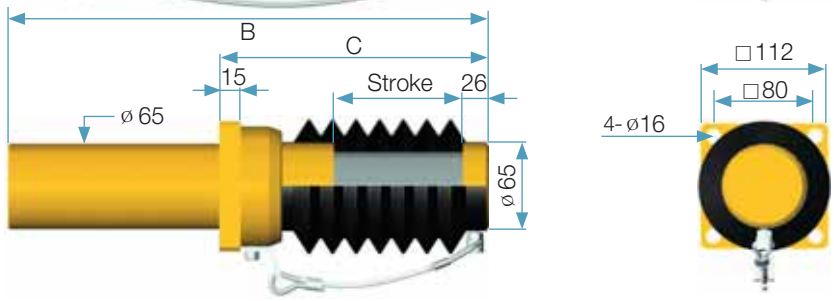

Dimensions (unit : mm)

Model	Stroke (mm) S	Rear Type	Front Type		Mounting Bolt Size
		A	B	C	
KHG65-25	25	262	250	126	
-50	50	312	300	151	
-75	75	372	360	176	
-100	100	432	420	231	14
-125	125	497	485	256	
-150	150	552	540	281	
-200	200	682	670	371	

KHG 85 Series
Engineering Data

Model	Stroke (mm) S	Max.Energy / Cycle (kJ) E_T	Max.Energy / Hour (kJ/h) E_TC	Max Buffer Force (kN) F_S	Recoil Force (kN)		Max Side Load Angle (°)		Weight (kg)
					Ext	Comp	R Type	F Type	
KHG85-50	50	8	600	200		10	4	3.5	12
-100	100	16	1,200	200		13	3	3	15
-150	150	24	1,800	200	1.5	17	2	2	18
-200	200	32	2,400	200		19	1.8	1.5	20
-250	250	40	2,850	200		20	1.5	1.2	22

Rear Mount

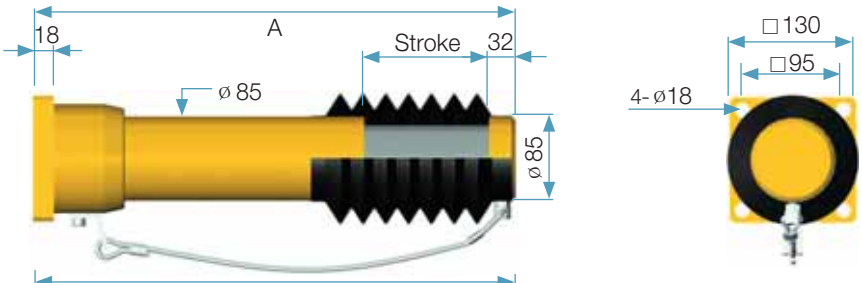

Front Mount

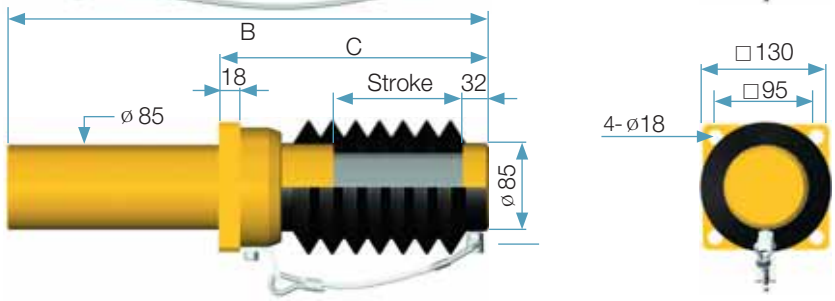

Dimensions (unit : mm)

Model	Stroke (mm) S	Rear Type	Front Type		Mounting Bolt Size
		A	B	C	
KHG85-50	50	323	310	183	16
-100	100	463	450	242	
-150	150	603	590	305	
-200	200	743	730	367	
-250	250	883	870	430	

KHG 100 Series
Engineering Data

Model	Stroke (mm) S	Max.Energy / Cycle (kJ) E_T	Max.Energy / Hour (kJ/h) E_TC	Max Buffer Force (kN) F_S	Recoil Force (kN)		Max Side Load Angle (°)		Weight (kg)
					Ext	Comp	R Type	F Type	
KHG100-50	50	11	750	280	2.4	16	5	4	17
-80	80	18	1,200	280		16	4.5	4	20
-100	100	23	1,600	280		16	5	4	25
-120	120	27	1,800	280		20	4.5	3.5	27
-150	150	34	2,300	280		20	4.5	3.5	28
-200	200	46	3,100	280		20	4	3	34
-250	250	58	3,600	280		25	3.5	2.5	39
-300	300	69	4,200	280		25	3	2	43
-400	400	90	5,400	280		25	2.5	2	49
-500	500	110	6,600	275		25	2.5	2	55
-600	600	125	7,200	260		25	2	1.5	62
-800	800	140	7,900	210		25	2	1.5	73

Rear Mount

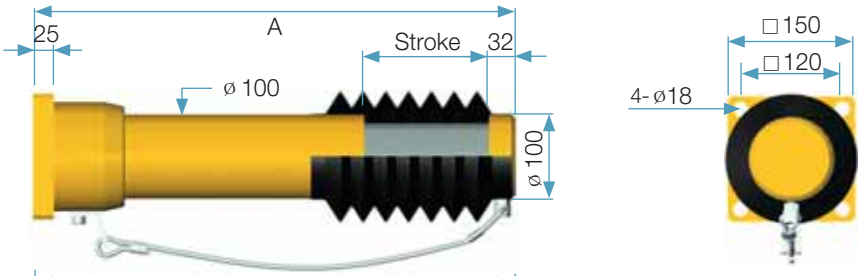

Front Mount

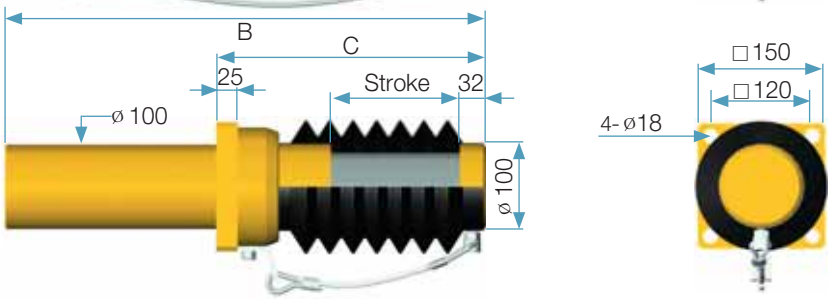

Dimensions (unit : mm)

Model	Stroke (mm) S	Rear Type	Front Type		Mounting Bolt Size
		A	B	C	
KHG100-50	50	332	312	175	16
-80	80	423	403	215	
-100	100	450	430	252	
-120	120	529	509	270	
-150	150	580	560	315	
-200	200	720	700	377	
-250	250	865	845	440	
-300	300	1,010	990	502	
-400	400	1,349	1,329	645	
-500	500	-	1,616	890	
-600	600	-	1,888	1,010	
-800	800	-	2,426	1,345	

KHG 120 Series
Engineering Data

Model	Stroke (mm) S	Max.Energy / Cycle (kJ) E_T	Max.Energy / Hour (kJ/h) E_TC	Max Buffer Force (kN) F_S	Recoil Force (kN)		Max Side Load Angle (°)		Weight (kg)
					Ext	Comp	R Type	F Type	
KHG120-100	100	45	2,900	570	3.5	38	4	4.5	41
-150	150	70	4,400	570		38	4	3.5	48
-200	200	92	5,800	570		38	3.5	3.5	58
-250	250	114	7,200	570		40	3	3	65
-300	300	130	8,500	450		40	3	2.5	72
-400	400	160	10,000	450		40	2.5	2	78
-500	500	180	11,500	450		40	2	1.5	86
-600	600	200	12,800	450		40	2	1.5	95
-800	800	240	13,600	375		40	2	1.3	112
-1000	1,000	280	14,500	350		40	2	1.3	118

Rear Mount

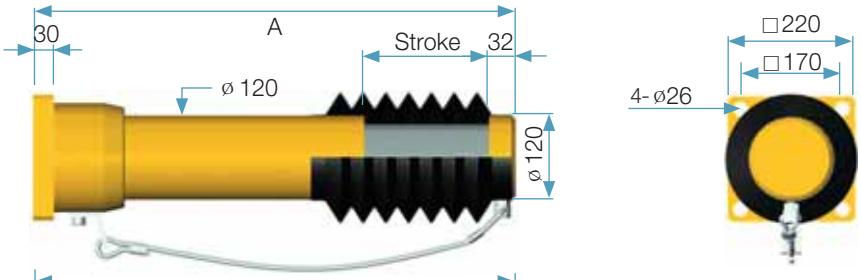

Front Mount

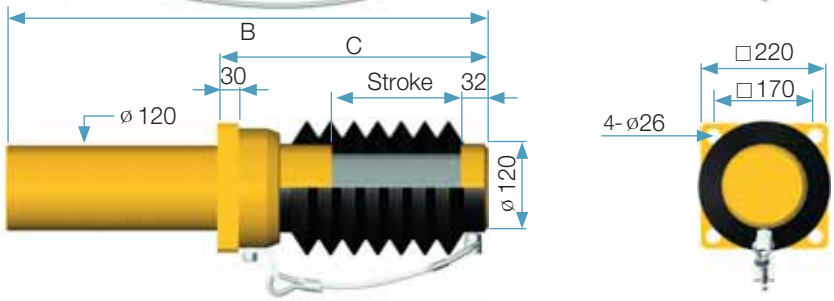

Dimensions (unit : mm)

Model	Stroke (mm) S	Rear Type	Front Type		Mounting Bolt Size
		A	B	C	
KHG120-100	100	470	450	277	24
-150	150	610	590	340	
-200	200	760	740	402	
-250	250	900	880	465	
-300	300	1,050	1,030	527	
-400	400	1,340	1,320	680	
-500	500	1,620	1,600	815	
-600	600	1,920	1,900	950	
-800	800	-	2,400	1,290	
-1000	1,000	-	2,960	1,360	

KHG 130 Series
Engineering Data

Model	Stroke (mm) S	Max.Energy / Cycle (kJ) E_T	Max.Energy / Hour (kJ/h) E_TC	Max Buffer Force (kN) F_S	Recoil Force (kN)		Max Side Load Angle (°)		Weight (kg)
					Ext	Comp	R Type	F Type	
KHG130-250	250	120	8,200	550	4.5	40	4.5	4	85
-300	300	140	9,600	550		40	4.5	4	92
-400	400	180	12,000	550		50	4	3.5	106
-500	500	220	15,000	550		50	3.5	3.5	118
-600	600	260	17,800	550		50	2	1.5	127
-800	800	300	19,000	460		50	2	1.5	148

Rear Mount

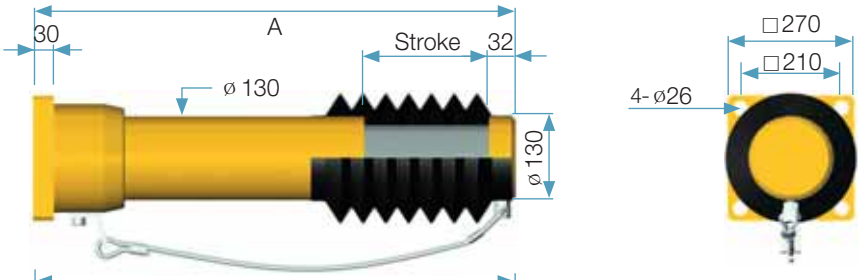

Front Mount

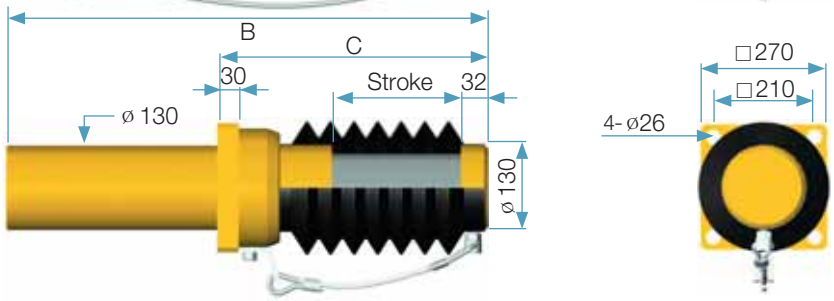

Dimensions (unit : mm)

Model	Stroke (mm) S	Rear Type	Front Type		Mounting Bolt Size
		A	B	C	
KHG130-250	250	897	877	545	24
-300	300	1,029	1,009	605	
-400	400	1,293	1,273	735	
-500	500	1,602	1,582	820	
-600	600	-	1,917	1,060	
-800	800	-	2,445	1,350	

KHG 140 Series
Engineering Data

Model	Stroke (mm) S	Max.Energy / Cycle (kJ) E_T	Max.Energy / Hour (kJ/h) E_TC	Max Buffer Force (kN) F_S	Recoil Force (kN)		Max Side Load Angle (°)		Weight (kg)
					Ext	Comp	R Type	F Type	
KHG 140-100	100	62	3,800	760		38	4.5	4	60
-150	150	91	5,800	760		65	4.5	4	72
-200	200	124	9,800	730		70	4	3.5	85
-300	300	175	12,000	730		70	3.5	2.5	110
-400	400	234	15,000	730	5.5	78	2.5	1.5	135
-500	500	270	17,000	680		78	2	1.3	150
-600	600	300	20,000	630		78	2	1.3	160
-800	800	325	25,000	510		78	2	1.3	185
-1000	1,000	360	27,500	450		78	1.6	1.2	200

Rear Mount

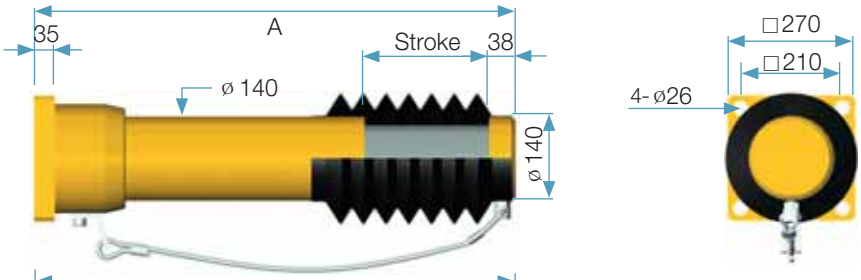

Front Mount

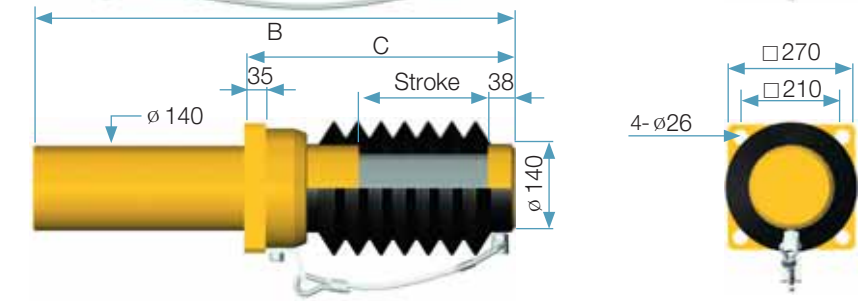

Dimensions (unit : mm)

Model	Stroke (mm) S	Rear Type	Front Type		Mounting Bolt Size
		A	B	C	
KHG140-100	100	480	460	297	24
-150	150	620	600	360	
-200	200	770	750	422	
-300	300	1,060	1,040	547	
-400	400	1,350	1,330	712	
-500	500	1,630	1,610	847	
-600	600	1,930	1,910	982	
-800	800	2,350	2,330	1,252	
-1000	1,000	-	2,880	1,595	

KHG 150 Series
Engineering Data

Model	Stroke (mm) S	Max.Energy / Cycle (kJ) E_T	Max.Energy / Hour (kJ/h) E_TC	Max Buffer Force (kN) F_S	Recoil Force (kN)		Max Side Load Angle (°)		Weight (kg)
					Ext	Comp	R Type	F Type	
KHG150-100	100	70	4,000	880	6.2	45	4	4.5	77
-200	200	136	7,200	850		75	4	3.5	90
-300	300	183	13,000	770		75	3.5	3.5	135
-400	400	243	13,500	760		75	3	3	146
-500	500	285	17,400	710		85	3	2.5	166
-600	600	323	21,000	670		85	2.5	2	176
-800	800	367	25,600	580		85	2	1.5	220
-1000	1,000	410	28,000	510		85	2	1.5	253

Rear Mount

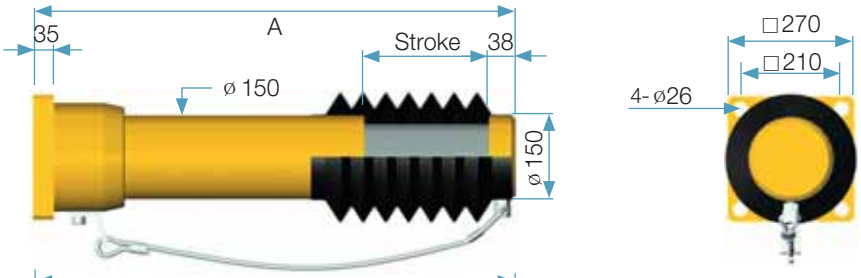

Front Mount

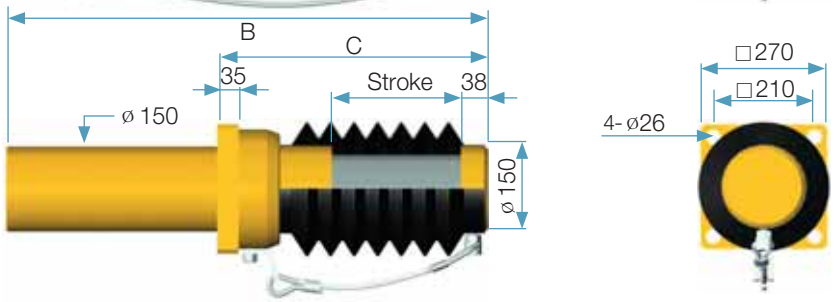

Dimensions (unit : mm)

Model	Stroke (mm) S	Rear Type	Front Type		Mounting Bolt Size
		A	B	C	
KHG150-100	100	510	490	327	24
-200	200	800	780	452	
-300	300	1,090	1,070	577	
-400	400	1,280	1,260	740	
-500	500	1,660	1,640	800	
-600	600	1,960	1,940	905	
-800	800	2,360	2,340	1,270	
-1000	1,000	2,910	2,890	1,625	

KHG 180 Series
Engineering Data

Model	Stroke (mm) S	Max.Energy / Cycle (kJ) E_T	Max.Energy / Hour (kJ/h) E_TC	Max Buffer Force (kN) F_S	Recoil Force (kN)		Max Side Load Angle (°)		Weight (kg)
					Ext	Comp	R Type	F Type	
KHG 180-100	100	80	4,500	980	8	75	4.5	4	110
-200	200	160	10,000	980		80	4.5	4	126
-250	250	200	12,800	980		80	4.5	4	140
-400	400	280	14,500	880		90	4.5	4	168
-500	500	350	18,000	880		100	4	3.5	198
-600	600	430	23,000	890		100	3.5	3	235
-800	800	570	27,000	890		100	3	2.5	295
-1000	1,000	720	29,000	890		110	2.5	2	360

Rear Mount

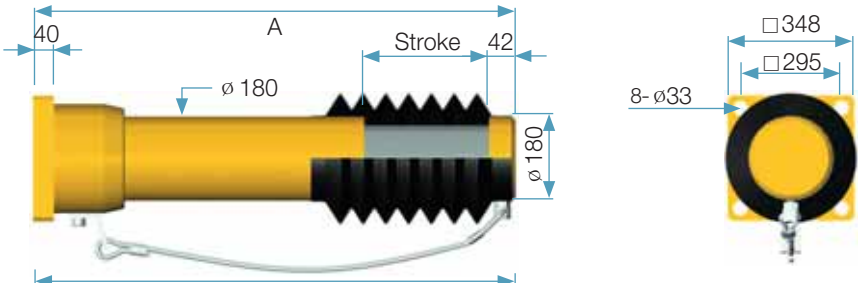

Front Mount

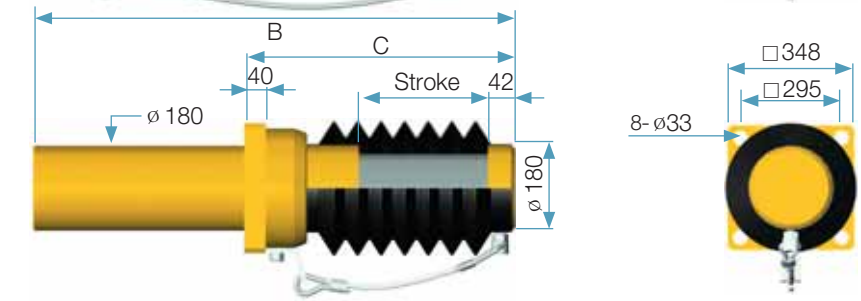

Dimensions (unit : mm)

Model	Stroke (mm) S	Rear Type	Front Type		Mounting Bolt Size
		A	B	C	
KHG180-100	100	491	471	350	30
-200	200	760	740	450	
-250	250	850	830	550	
-400	400	1,486	1,466	804	
-500	500	1,766	1,746	939	
-600	600	2,066	2,046	1,074	
-800	800	2,666	2,646	1,344	
-1000	1,000	3,226	3,206	1,614	

KHS Series
Hydraulic Buffer

KOBA
Best Energy Absorption

KHS Series - high efficient heavy duty buffer

When the moving load is collided to bumper head, the piston rod enters inner tube according to stroke.
The check valve is closed and oil is discharging out of inner tube through orifices In this process,
the oil is increased as much as the volume of piston rod and is saved in accumulator
During this process, KHS model absorbs the impact force with damping force.
In return, Check valve opens and compressed coil spring makes the piston rod returned to original position.

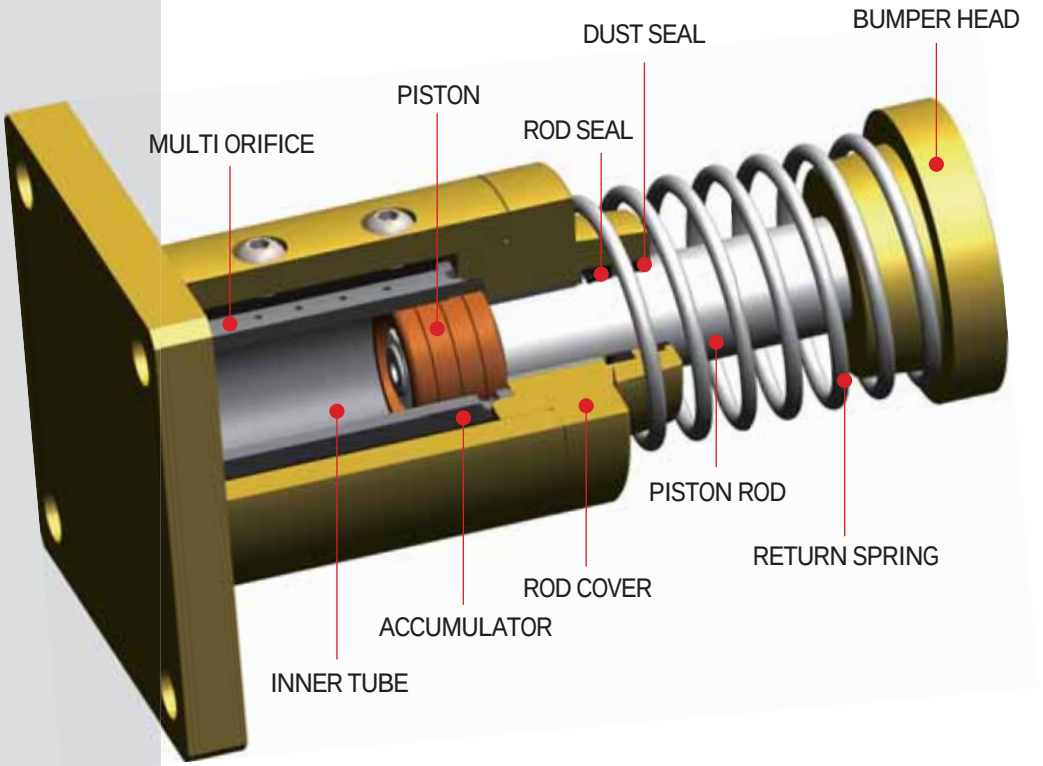

Feature

KHS Series is large hydraulic buffer. KHS Series is designed and manufactured the multiple orifices to fit the conditions and requirements of each user for high efficiency buffering. It is suitable for production lines that require emergency control and repetitive operation control. KOBA hydraulic buffer is met the Global industrial safety standards like OSHA, AISE, CMMA, DIN, and FEM.

- Adjustment : self-adjustment customized
- Damping fluid : Oil
- Temperature range (-10~80℃), Special (-30~100℃)
- Return force : Coil Return Spring
- Piston Rod : Hard Chrome(over 25㎛)
- Body protection : Epoxy Paint Coatings
- Application : container crane, harbour crane, overhead crane, amusement rids, steel plants

KHS Series Ordering Information

KHS 130 - 150 - RS - B C

- Mount Type
- Accessories
- C : Cable
- B : Bellows
- Stroke
- Body Dia
- KHS : Spring Return

RS : Rear Flange Mount
FS : Front Flange Mount
SS : Front and Rear Flange Mount
RC : Rod Clevis
EC : End Clevis
RF : Rear Flange Front Foot Mount
FF : Front and Rear Foot Mount

Accessory

Bellows Cover

Clevis Mounting

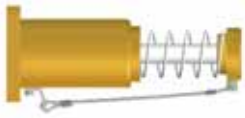

Front & Rear Safety Cable

Front Mount

Special Order

- Temperature : -30~100℃
- Special Coatings
- Body Chrome Plating
- Stainless Steel

KHS 64, 90, 100 Series
Engineering Data

Model	Stroke (mm) S	Max.Energy / Cycle (kJ) E_T	Max.Energy / Hour (kJ/h) E_TC	Max Buffer Force (kN) F_S	Recoil Force (kN)		Max Side Load Angle (°)	Weight (kg)
					Ext	Comp		
KHS 64-50	50	0.5	10	12.5	6.5	14.8	3	3
KHS 90-50	50	4	80	100	14.2	30.5	3	8.5
75	75	6	108	100	10.5	19	3	9.5
-100	100	8	128	100	9.9	42	3	12
KHS 100-50	50	4.4	79	110	14.2	30.5	3	14
-100	100	8.8	140	110	9.9	42	3	17

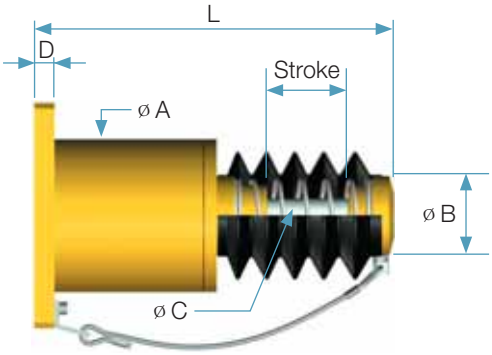

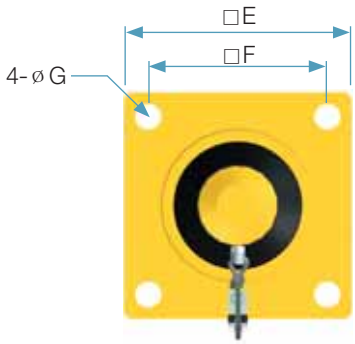

Dimensions (unit : mm)

Model	Stroke (mm) S	L	ø A	ø B	ø C (Rod)	D	E	F	4-ø G
KHS64 - 50	50	200	64	56	20	12	90	65	4-ø 11
KHS90 - 50	50	240	90	78	30	16	130	100	4-ø 14
-75	75	280	90	78	30	16	130	100	4-ø 14
-100	100	360	90	78	30	16	130	100	4-ø 14
KHS100 - 50	50	240	100	84	30	16	130	100	4-ø 14
-100	100	340	100	84	30	16	130	100	4-ø 14

KHS 130, 170, 190 Series
Engineering Data

Model	Stroke (mm) S	Max.Energy / Cycle (kJ) E_T	Max.Energy / Hour (kJ/h) E_TC	Max Buffer Force (kN) F_S	Recoil Force (kN)		Max Side Load Angle (°)	Weight (kg)
					Ext	Comp		
KHS 130-70	70	10	170	179	18.2	42.5	3	21
-100	100	15	270	188	17.8	48	3	24
-150	150	21	294	175	18.3	53.5	2.5	28
KHS 170-80	80	22	396	340	18.2	44.3	3	38
-150	150	41	574	340	18.3	53.5	2	48
KHS 190-100	100	40	720	500	17.8	48	2.5	52
-150	150	60	840	500	18.3	53.5	2	64

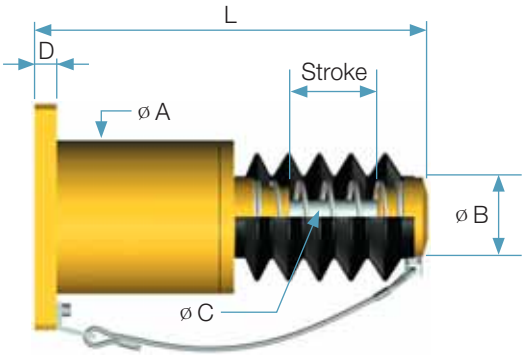

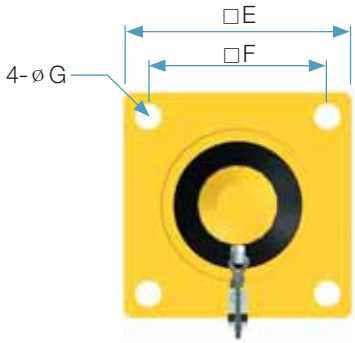

Dimensions (unit : mm)

Model	Stroke (mm) S	L	ø A	ø B	ø C (Rod)	D	E	F	4-ø G
KHS130 - 70	70	290	130	98	35	19	170	130	4-ø 22
-100	100	350	130	98	35	19	170	130	4-ø 22
-150	150	490	130	98	35	19	170	130	4-ø 22
KHS170 - 80	80	360	170	98	50	22	220	170	4-ø 26
-150	150	500	170	98	50	22	220	170	4-ø 26
KHS190 - 100	100	440	190	98	50	25	280	220	4-ø 33
-150	150	540	190	98	50	25	280	220	4-ø 33

KHS 220, 250 Series
Engineering Data

Model	Stroke (mm) S	Max.Energy / Cycle (kJ) E_T	Max.Energy / Hour (kJ/h) E_TC	Max Buffer Force (kN) F_S	Recoil Force (kN)		Max Side Load Angle (°)	Weight (kg)
					Ext	Comp		
KHS 220-100	100	44	792	550	40.5	134	2.5	69
-150	150	66	924	550	41.8	131	2	76
KHS 250-100	100	60	1,080	750	38.5	111.2	2.5	130
-150	150	90	1,260	750	34.2	107.5	2	140
-200	200	120	1,560	750	33	105	2	150
-300	300	180	2,160	750	38	121.8	2	170

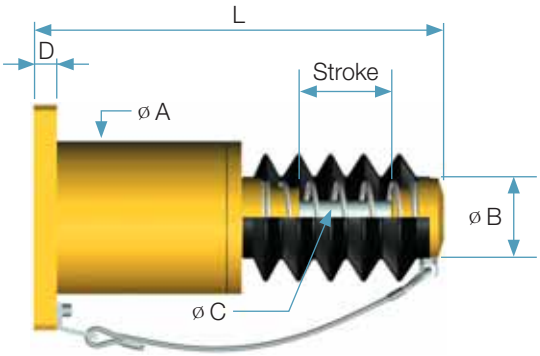

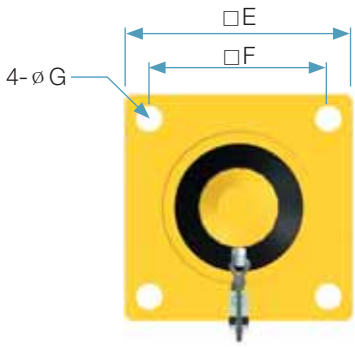

Dimensions (unit : mm)

Model	Stroke (mm) S	L	ø A	ø B	ø C (Rod)	D	E	F	4-ø G
KHS220 - 100	100	440	220	116	60	25	280	220	4-ø 33
-150	150	540	220	116	60	25	280	220	4-ø 33
KHS250 - 100	100	480	250	138	70	32	320	250	4-ø 33
-150	150	650	250	158	70	32	320	250	4-ø 33
-200	200	750	250	158	70	32	320	250	4-ø 33
-300	300	880	250	158	70	32	320	250	4-ø 33

KHS 300, 340, 360 Series
Engineering Data

Model	Stroke (mm) S	Max.Energy / Cycle (kJ) E_T	Max.Energy / Hour (kJ/h) E_TC	Max Buffer Force (kN) F_S	Recoil Force (kN)		Max Side Load Angle (°)	Weight (kg)
					Ext	Comp		
KHS 300-150	150	117	1,638	975	46	142	2	186
-250	250	180	2,340	1,125	45	151	1.5	206
KHS 340-200	200	200	2,600	1,250	51	162	1.5	275
-300	300	300	3,600	1,250	49	176	1.5	305
KHS 360-250	250	294	3,822	1,470	68	178	1.5	324
-400	400	470	4,700	1,470	64	182	1.5	376

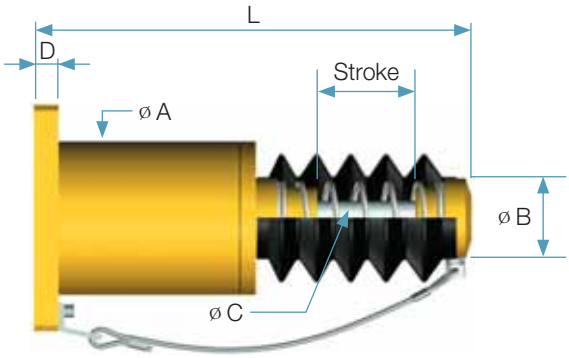

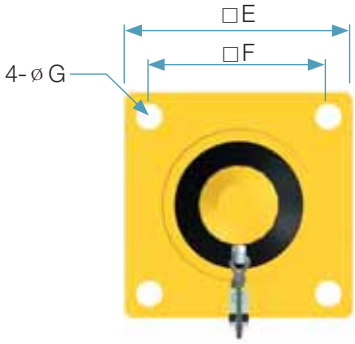

Dimensions (unit : mm)

Model	Stroke (mm) S	L	ø A	ø B	ø C (Rod)	D	E	F	4-ø G
KHS300 - 150	150	650	300	170	80	36	400	300	4-ø 33
-250	250	850	300	170	80	36	400	300	4-ø 33
KHS340 -200	200	800	340	228	100	45	440	340	4-ø 39
-300	300	1,000	340	228	100	45	440	340	4-ø 39
KHS360 - 250	250	900	356	280	100	45	460	360	4-ø 39
-400	400	1,200	356	280	100	45	460	360	4-ø 39

KCSC Series
Stacker Crane Buffers

KOBA
Best Energy Absorption

KCSC series is used usually in stacker crane of Automatic distributing system. KCSC has wide range of capacity and stroke (Stroke 1500mm, Capacity 930 kJ). It is possible to design and manufacture for special purpose as customer's request. KOBA hydraulic buffer is met the Global industrial safety standards like OSHA, AISE, CMMA, DIN, and FEM.

KCSC has similar structure and principle as that of KHG but KCSC is designed to have large volume of Gas compared with that of oil so it has Low Peak and Low Recoil Force. This point makes the application operate with minimum resistance force and absorb the impact force smoothly and progressively in emergency case.

Feature

- Cycle rate : up to 60 cycle/h
- Standard impact velocity : 3.8 m/s
- Temperature range (-10~80℃)
  Special (-30~100℃)
- Return : Nitrogen Gas
- Piston Rod : Hard Chrome(over 25㎛)
- Body protection : zinc plated or 3-layer epoxy paint (option)
- Options
  - Protective Bellows
  - Safety Cable
  - Urethane Cap
  - Mounting Plates
  - Foot Mounts
  - Sensor

Special type : Sensor/Urethane Cap

KCSC Series Ordering Information

KCSC 90 - 50 - RS - SC

- SC — Accessories
  - B : Protective Bellows
  - SC : Safety Cable
  - UC : Urethane Cap
  - S : Sensor
- RS — FS:Front Flange / RS:Rear Flange / FM:Foot Mount
- 50 — Stroke
- 90 — Body Dia
- KCSC — Series

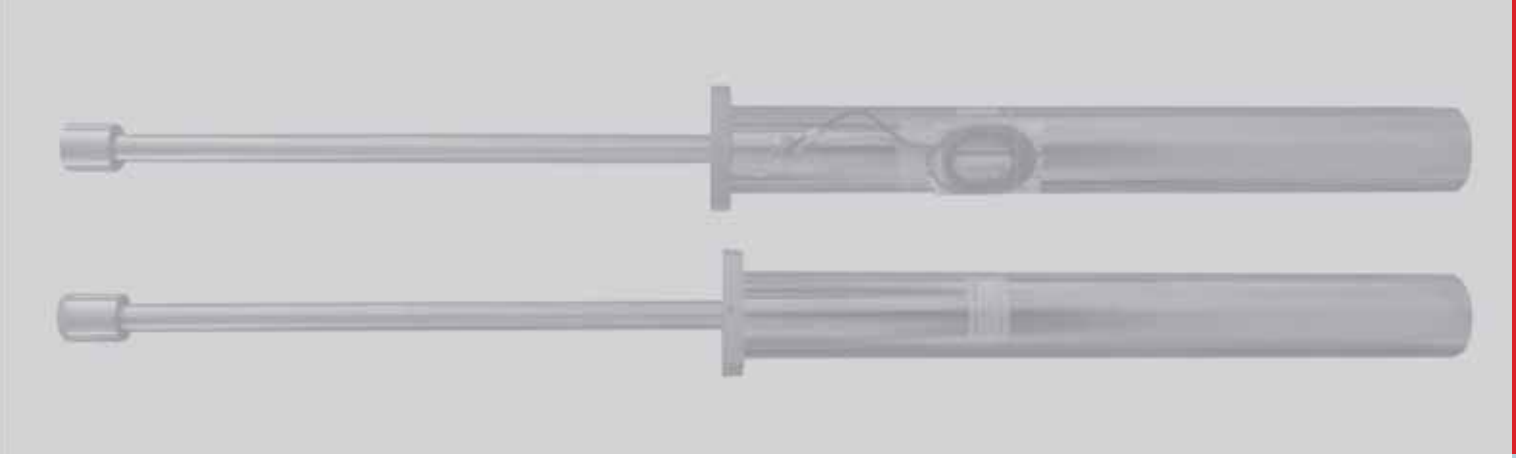

KCSC 90 Series

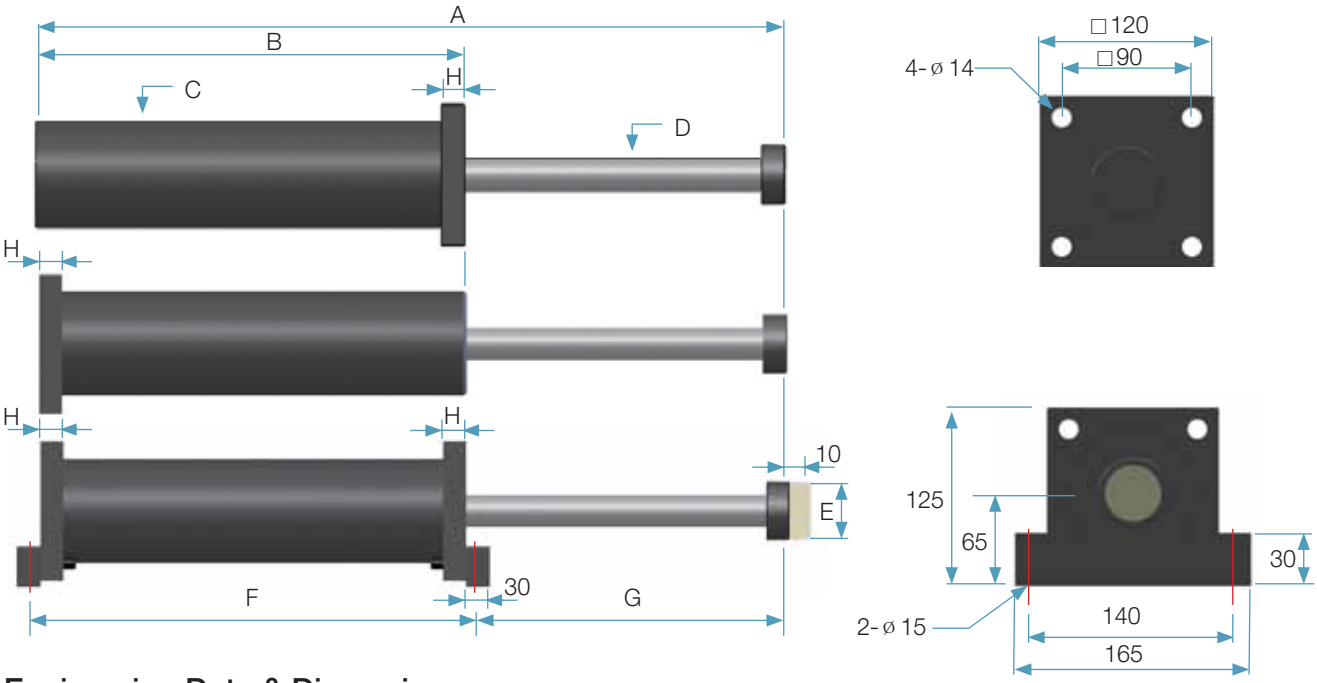

Engineering Data & Dimensions

Model	Stroke (mm) S	Max. Energy /Cycle (kJ) E_T	Max. Energy /Hour (kJ/hr) E_TC	Max. Shock Foce (kN) F_S	Dimension (unit : mm)							
					A	B	C	D	E	F	G	H
KCSC90-50	50	4	193	75	310	208	90	30	50	240	86	20
-100	100	7	395	75	410	258	90	30	50	290	136	20
-150	150	10	588	75	510	308	90	30	50	340	186	20
-200	200	13	784	75	613	360	90	30	50	392	237	20
-250	250	16	839	75	715	411	90	30	50	443	288	20
-300	300	20	940	75	817	462	90	30	50	494	339	20
-350	350	23	1,265	75	918	512	90	30	50	544	390	20
-400	400	21	1,150	67	1,019	563	90	30	50	595	440	20
-450	450	20	1,090	55	1,121	614	90	30	50	646	491	20
-500	500	19	1,060	47	1,223	665	90	30	50	697	542	20
-600	600	15	880	31	1,427	767	90	30	50	799	644	20
-700	700	13	610	24	1,668	910	90	30	50	956	742	20
-800	800	12	539	19	1,888	1,030	90	30	50	1,076	842	20

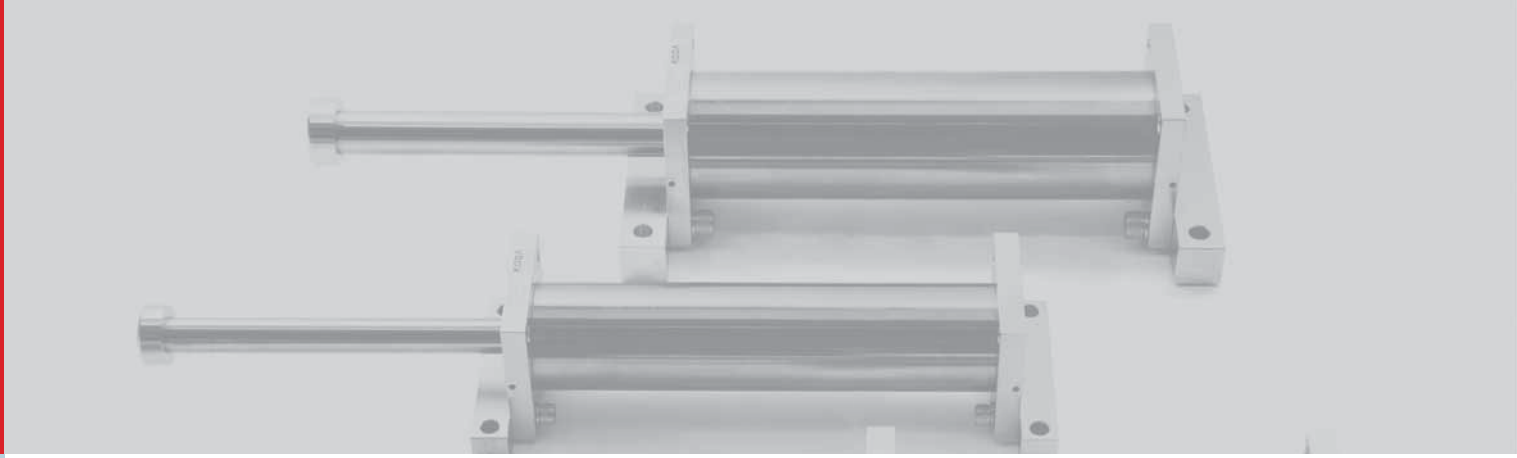

KCSC 110 Series

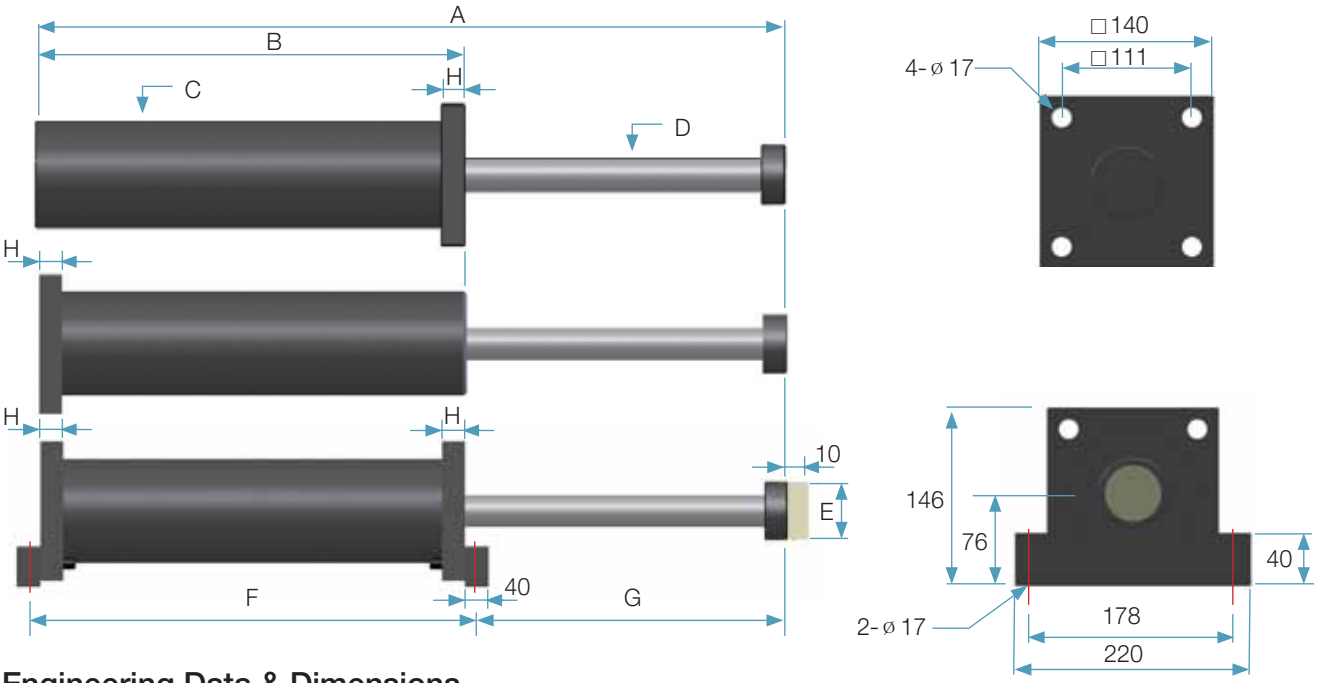

Engineering Data & Dimensions

Model	Stroke (mm) S	Max. Energy /Cycle (kJ) E_T	Max. Energy /Hour (kJ/hr) E_TC	Max. Shock Foce (kN) F_S	Dimension (unit : mm)							
					A	B	C	D	E	F	G	H
KCSC110-50	50	5	296	115	370	230	113	40	60	270	120	25
-100	100	10	568	115	470	280	113	40	60	340	170	25
-150	150	15	881	115	553	339	113	40	60	379	194	25
-200	200	20	934	115	655	390	113	40	60	430	245	25
-250	250	25	1,056	115	757	441	113	40	60	481	296	25
-300	300	29	1,186	115	859	492	113	40	60	532	347	25
-350	350	34	1,352	115	960	543	113	40	60	583	397	25
-400	400	39	1,517	115	1,062	594	113	40	60	634	448	25
-450	450	44	1,680	115	1,164	645	113	40	60	685	499	25
-500	500	49	1,845	115	1,256	695	113	40	60	735	550	25
-600	600	59	2,168	115	1,469	797	113	40	60	837	652	25
-700	700	69	2,485	115	1,672	899	113	40	60	939	753	25
-800	800	79	2,806	115	1,953	1,079	113	40	60	1,119	854	25
-900	900	88	3,130	115	2,151	1,179	113	40	60	1,219	952	25
-1000	1,000	73	3,483	92	2,351	1,279	113	40	60	1,319	1,052	25
-1200	1,200	60	2,758	63	2,751	1,479	113	40	60	1,519	1,252	25
-1400	1,400	41	1,917	37	3,171	1,689	113	40	60	1,729	1,462	25

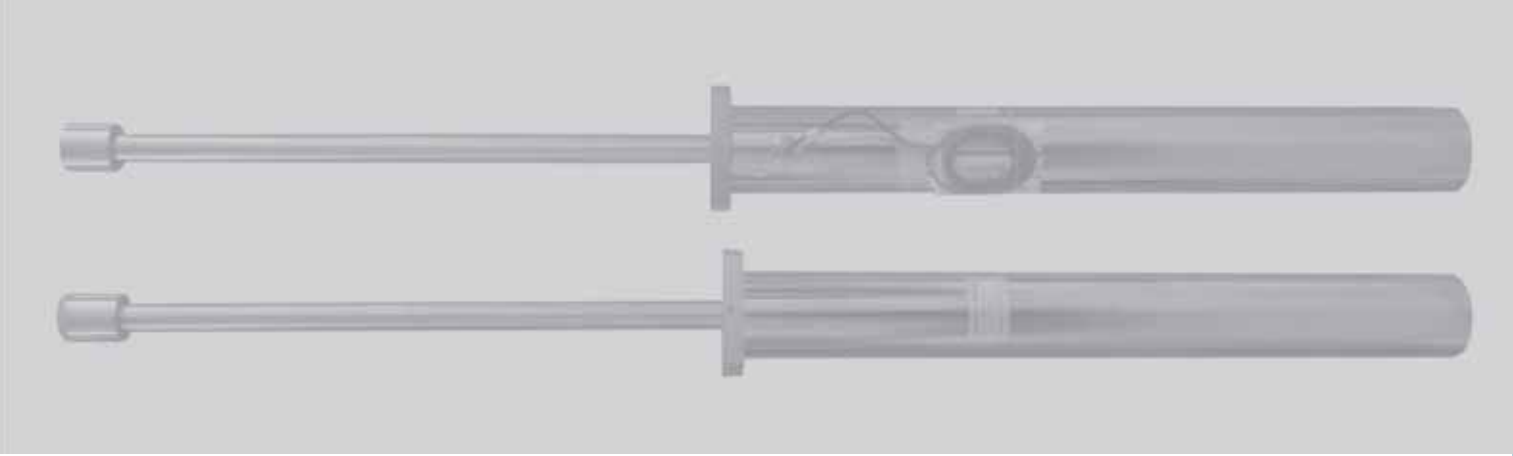

KCSC 130 Series

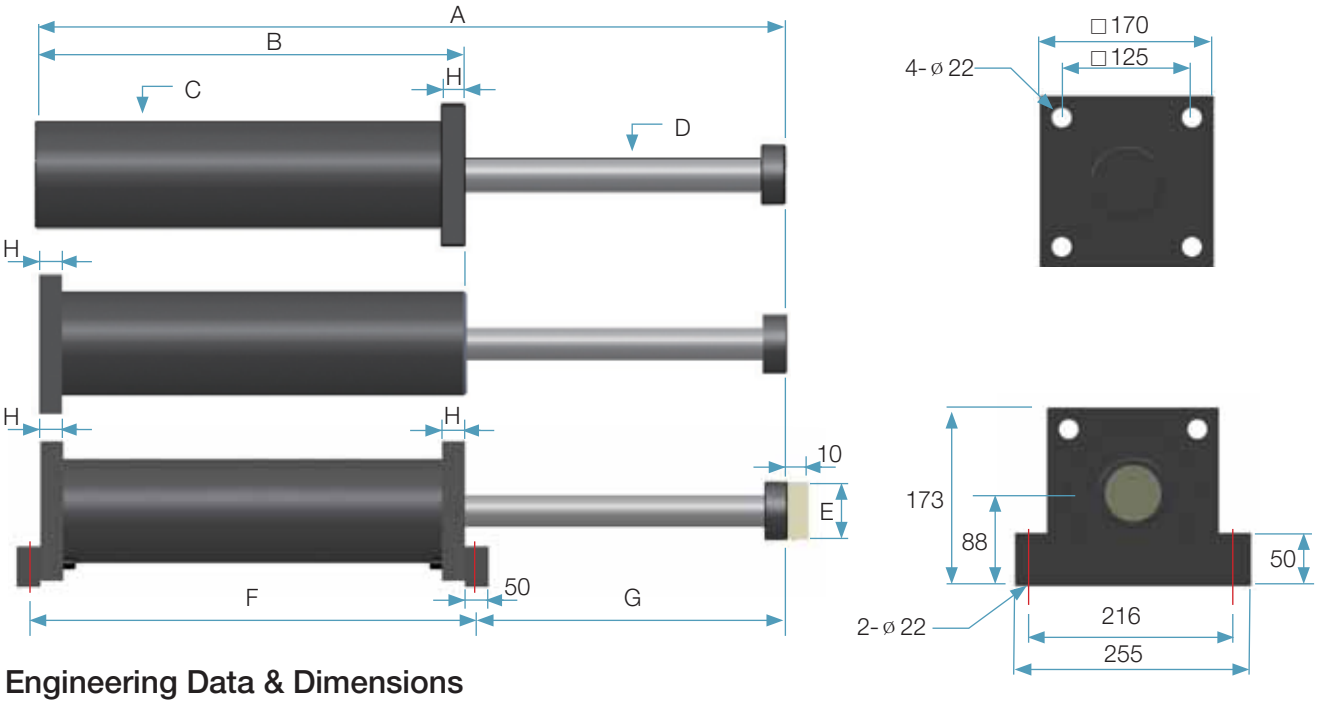

Engineering Data & Dimensions

Model	Stroke (mm) S	Max. Energy /Cycle (kJ) E_T	Max. Energy /Hour (kJ/hr) E_TC	Max. Shock Foce (kN) F_S	Dimension (unit : mm)							
					A	B	C	D	E	F	G	H
KCSC130-50	50	10	590	245	336	203	138	45	70	253	108	25
-75	75	15	659	245	387	229	138	45	70	279	133	25
-125	125	25	815	245	489	280	138	45	70	330	184	25
-200	200	39	1,110	245	640	355	138	45	70	405	260	25
-250	250	49	1,314	245	742	406	138	45	70	456	311	25
-300	300	58	1,512	245	844	457	138	45	70	507	362	25
-350	350	68	1,736	245	995	558	138	45	70	608	412	25
-400	400	78	1,934	245	1,097	609	138	45	70	659	463	25
-450	450	88	2,133	245	1,199	660	138	45	70	710	514	25
-500	500	97	2,329	245	1,301	711	138	45	70	761	565	25
-600	600	116	2,714	245	1,504	812	138	45	70	862	667	25
-700	700	136	3,102	245	1,707	914	138	45	70	964	768	25
-800	800	155	3,486	215	1,910	1,015	138	45	70	1,065	870	25
-900	900	167	3,785	181	2,156	1,164	138	45	70	1,214	967	25
-1000	1,000	117	3,824	147	2,356	1,264	138	45	70	1,314	1,067	25
-1200	1,200	103	4,722	107	2,756	1,464	138	45	70	1,514	1,267	25
-1400	1,400	73	2,851	66	3,156	1,664	138	45	70	1,714	1,467	25
-1500	1,500	66	2,438	55	3,384	1,778	138	45	70	1,828	1,581	25

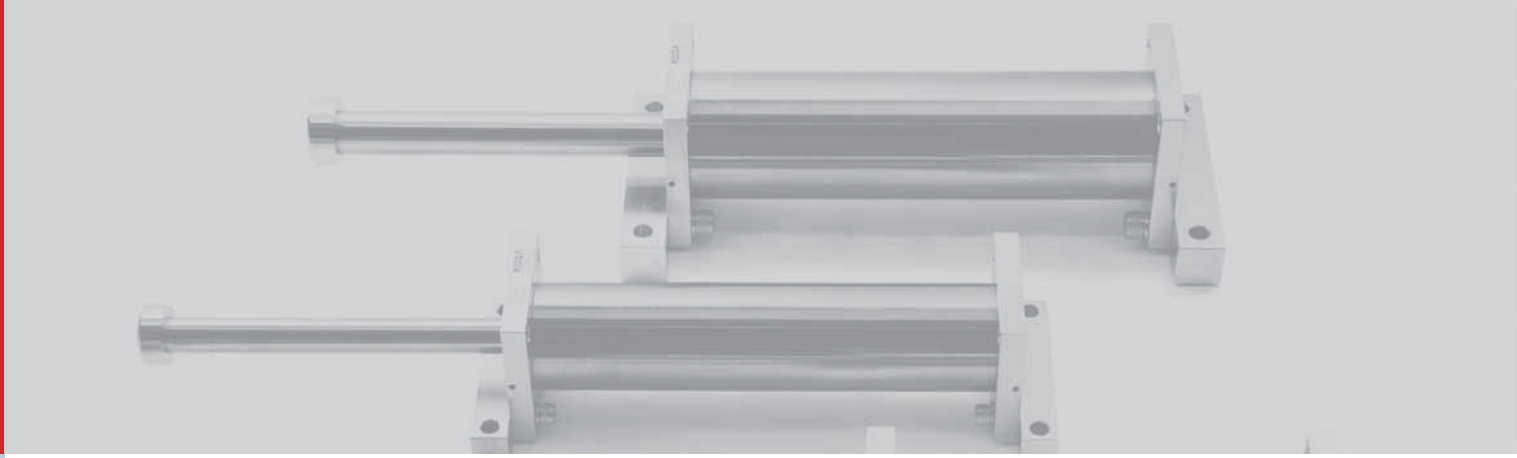

KCSC 200 Series

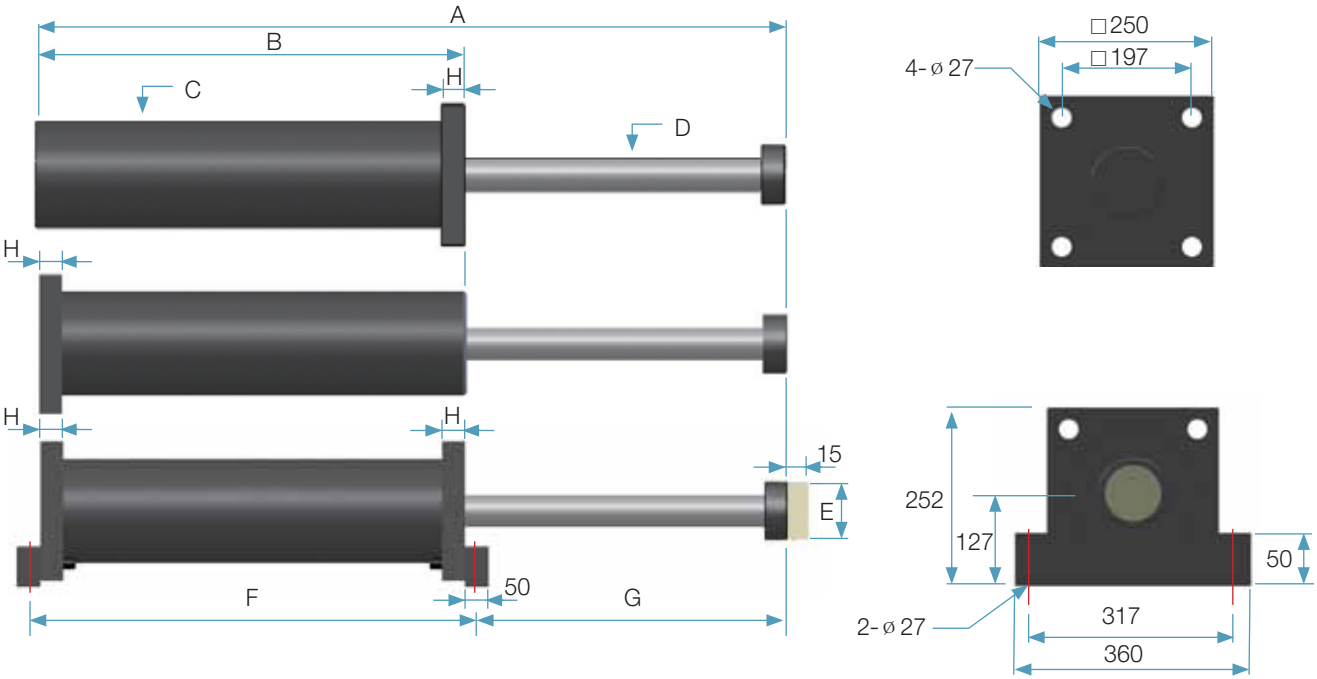

Engineering Data & Dimensions

Model	Stroke (mm) S	Max. Energy /Cycle (kJ) E_T	Max. Energy /Hour (kJ/hr) E_TC	Max. Shock Foce (kN) F_S	Dimension (unit : mm)							
					A	B	C	D	E	F	G	H
KCSC200-50	50	16	943	370	430	294	200	65	100	344	111	40
-100	100	31	1,534	370	532	345	200	65	100	395	162	40
-150	150	47	1,756	370	632	395	200	65	100	445	212	40
-200	200	63	1,988	370	735	447	200	65	100	497	263	40
-250	250	79	2,210	370	836	497	200	65	100	547	314	40
-300	300	93	2,855	370	1,032	642	200	65	100	692	365	40
-400	400	126	3,304	370	1,234	743	200	65	100	793	466	40
-500	500	157	3,758	370	1,438	845	200	65	100	895	568	40
-600	600	188	4,211	370	1,642	947	200	65	100	997	670	40
-700	700	220	4,661	370	1,844	1,048	200	65	100	1098	771	40
-800	800	251	5,114	370	2,048	1,150	200	65	100	1,200	873	40
-900	900	283	5,568	370	2,252	1,252	200	65	100	1,302	975	40
-1000	1,000	240	6,117	300	2,454	1,353	200	65	100	1,403	1,076	40
-1200	1,200	210	4,920	200	2,854	1,553	200	65	100	1,603	1,276	40

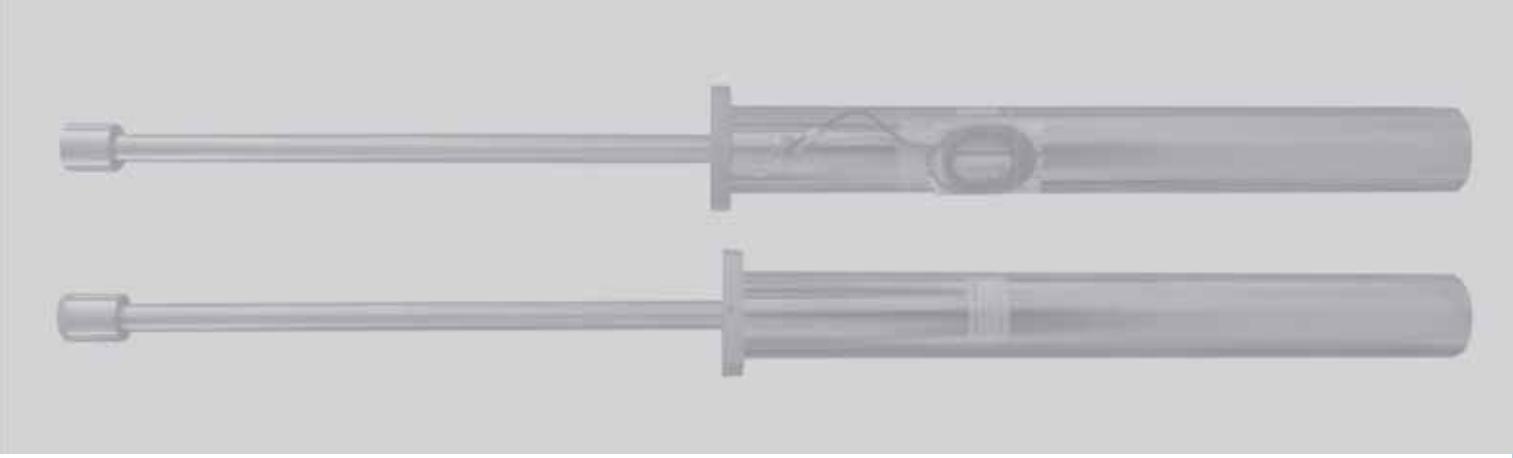

KCSC 215 Series

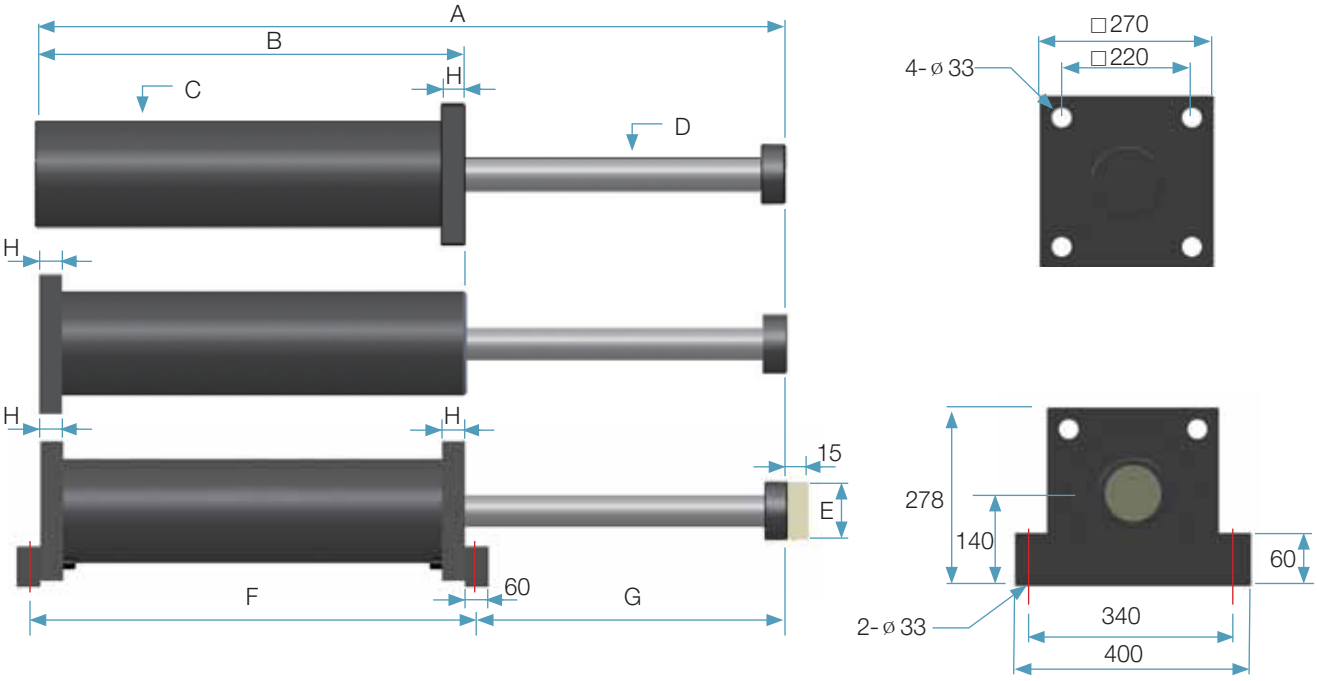

Engineering Data & Dimensions

Model	Stroke (mm) S	Max. Energy /Cycle (kJ) E_T	Max. Energy /Hour (kJ/hr) E_TC	Max. Shock Foce (kN) F_S	Dimension (unit : mm)							
					A	B	C	D	E	F	G	H
KCSC215-100	100	48	1,804	560	591	375	215	80	125	435	186	40
-150	150	72	2,051	560	693	426	215	80	125	486	237	40
-200	200	96	2,290	560	795	477	215	80	125	537	288	40
-250	250	120	2,530	560	895	527	215	80	125	587	338	40
-300	300	143	2,775	560	997	578	215	80	125	638	389	40
-400	400	191	3,265	560	1,201	680	215	80	125	740	491	40
-500	500	239	4,234	560	1,504	882	215	80	125	942	592	40
-600	600	287	4,741	560	1,708	984	215	80	125	1,044	694	40
-700	700	334	5,209	560	1,910	1,085	215	80	125	1,145	795	40
-800	800	382	5,699	560	2,114	1,187	215	80	125	1,247	897	40
-1000	1,000	478	6,687	560	2,520	1,390	215	80	125	1,450	1,100	40
-1200	1,200	417	6,255	435	2,920	1,590	215	80	125	1,650	1,300	40

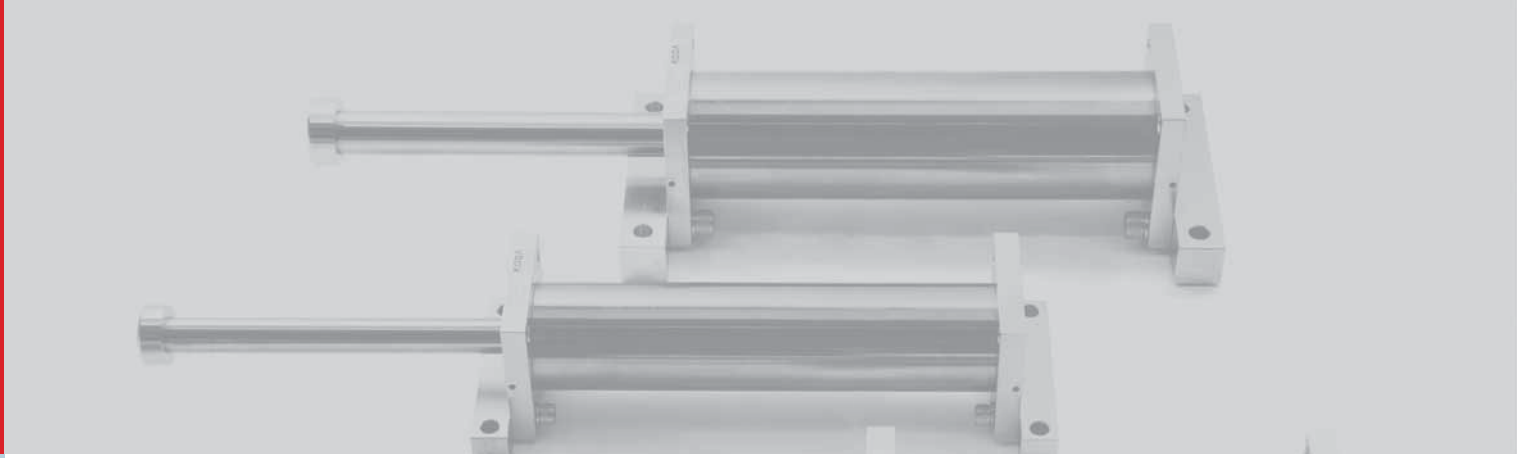

KCSC 275 Series

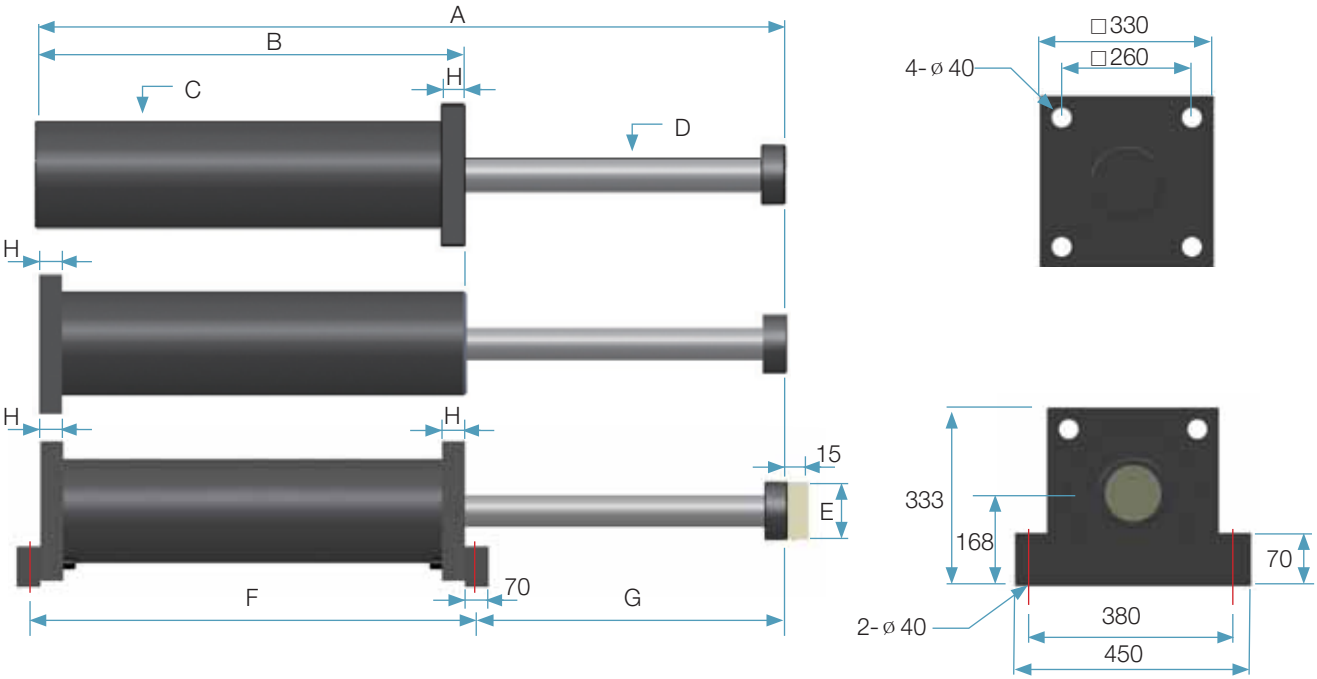

Engineering Data & Dimensions

Model	Stroke (mm) S	Max. Energy /Cycle (kJ) E_T	Max. Energy /Hour (kJ/hr) E_TC	Max. Shock Foce (kN) F_S	Dimension (unit : mm)							
					A	B	C	D	E	F	G	H
KCSC275-100	100	78	2,445	915	637	391	275	100	160	461	211	50
-150	150	117	2,766	915	737	441	275	100	160	511	261	50
-200	200	156	3,053	915	839	492	275	100	160	562	312	50
-250	250	194	3,373	915	941	543	275	100	160	613	363	50
-300	300	233	3,767	915	1,043	594	275	100	160	664	414	50
-400	400	311	4,303	915	1,246	696	275	100	160	766	515	50
-500	500	389	4,934	915	1,450	798	275	100	160	868	617	50
-600	600	467	6,186	915	1,769	1,015	275	100	160	1,085	719	50
-750	750	583	7,117	915	2,073	1,167	275	100	160	1,237	871	50
-900	900	700	8,048	915	2,379	1,320	275	100	160	1,390	1,024	50
-1050	1,050	816	8,970	915	2,683	1,472	275	100	160	1,542	1,176	50
-1200	1,200	790	8,061	827	2,989	1,625	275	100	160	1,695	1,329	50

KOBA
Best Energy Absorption

KES Series
Visco-Elastic Buffer

KES series is designed and developed to use the unique hydrostatic compression characteristics of special Visco-elastomers. KES has compact and reliable design and high damping coefficient. KES has advantage to get energy absorption and return spring function in a single unit without additional gas or mechanical spring return mechanism. It is allowed to use various range of temperature with stable damping force.

Brief Overview

- Impact velocity up to 5m/s
- Temperature range : -40 ℃~80℃
- Piston Rod : Hard Chrome(over 25㎛)
- Body protection : epoxy paint, nickel or zinc plated

Preload spring function	Visco-elastic function
F_O : initial force C : damping coefficient , V : impact velocity , $0.1 \leq \alpha \leq 0.4$	
$F = F_O + KX$	$F = F_O + KX + CV^{\alpha}$

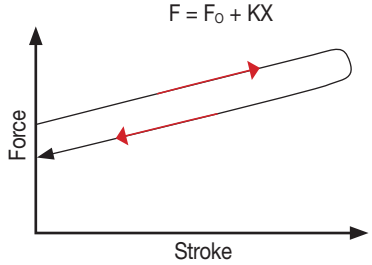

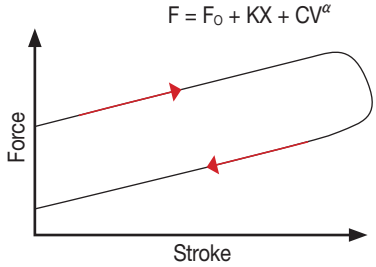

KES Series Ordering Information

KES M - 116 - 50 - RF

- RF:Rear Flange / FF:Front Flange / FM:Foot Mount
- Stroke
- Body Dia
- Model : M, E, S, H
- Series

M : Mini
E : ENERGY
S : Stroke
H : Heavy

Application worksheet (Model selection)

Example : KESM Series

- Impact velocity (V_e) : 1.5 m/s
- Impact mass (W_e) : 5 ton
- Impact frequency : 20 impact/h

1. Energy calculation (E)

$$E_T = \frac{1}{2} W_e V_e^2 \qquad E = \frac{1}{2} \times 5{,}000 \times 1.5^2 = 5{,}625\ Nm = 5.6\ kJ$$

2. Temporary Model Selection

KESM90-60 $\quad E_T = 7\,[kJ] \quad (E < E_T)$

KESS50-150 $\quad E_T = 6\,[kJ]$

3. Allowable Impact Frequency

- case1 : KESM90-60 $\quad C_e = 20 < 20 \cdot \frac{E_T}{E} = 20 \cdot \frac{7}{5.6} = 25$ [impact/h]
- case2 : KESS50-150 $\quad C_e = 20 > 8 \cdot \frac{E_T}{E} = 8 \cdot \frac{6}{5.6} = 8.57$ [impact/h] (Not satisfied)

4. Required Stroke Calculation

$$S_e = S\left(\sqrt{\frac{E}{E_T(0.03V + 0.24)}} + 1.36 - 1.17\right)$$

$$= 60\left(\sqrt{\frac{5.6}{7\,(0.03 \times 1.5 + 0.24)}} + 1.36 - 1.17\right) = 52.3[\text{mm}]$$

5. Calculation of Effective Reaction

$$F_{ME} = \left[\left(\frac{RDmax - RDmin}{S}\right)S_e + RDmin\right](0.1 \times V_e + 0.8)$$

$$= \left[\left(\frac{150 - 90}{60}\right) \times 52.3 + 90\right](0.1 \times 1.5 + 0.8) = 135.18[\text{kN}]$$

6. Final Model Selection

KESM90-60

E_T : Max Energy/cycle(kJ)

Application worksheet (Model selection)

Example : KESE Series

- Impact velocity (V_e) : 1.8 m/s
- Impact mass (W_e) : 40 ton
- Impact frequency (C_e) : 15 impact/h

1. Energy calculation (E)

$$E_T = \frac{1}{2} W_e V_e^2 \qquad E = \frac{1}{2} \times 40{,}000 \times 1.8^2 = 64{,}800\ Nm = 64.8\ kJ$$

2. Temporary Model Selection

KESE160-140 $\quad E_T = 75\,[kJ] \quad (E < E_T)$

KESS110-400H $\quad E_T = 100\,[kJ]$

3. Allowable Impact Frequency

- case1 : KESE160-140 $\quad C_e = 15 < 15 \cdot \frac{E_T}{E} = 15 \cdot \frac{75}{64.8} = 17.36$ [impact/h]
- case2 : KESS110-400H $\quad C_e = 15 > 8 \cdot \frac{E_T}{E} = 8 \cdot \frac{100}{64.8} = 12.34$ [impact/h] (Not satisfied)

4. Required Stroke Calculation

$$S_e = S\left(\sqrt{\frac{E}{E_T(0.03V + 0.24)}} + 1.36 - 1.17\right)$$

$$= 140\left(\sqrt{\frac{64.8}{75\,(0.03 \times 1.8 + 0.24)}} + 1.36 - 1.17\right) = 126.47[\text{mm}]$$

5. Calculation of Effective Reaction

$$F_{ME} = \left[\left(\frac{RDmax - RDmin}{S}\right)S_e + RDmin\right](0.1 \times V_e + 0.8)$$

$$= \left[\left(\frac{700 - 400}{140}\right) \times 126.47 + 400\right](0.1 \times 1.8 + 0.8) = 657.87[\text{kN}]$$

6. Final Model Selection

KESE160-140

E_T : Max Energy/cycle(kJ)

Application worksheet (Model selection)

Example : KESS Series

- Impact velocity (V_e) : 2.8 m/s
- Impactor mass (W_e) : 20 ton
- Impact frequency (C_e) : 8 impact/h
- Allowable Reaction Force : 350 kN
- Allowable D1 : 150 mm

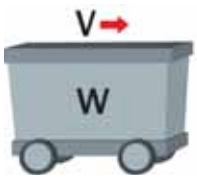

1. Energy calculation (E)

$$E = \frac{1}{2} W_e V_e^2 \qquad E = \frac{1}{2} \times 20{,}000 \times 2.8^2 = 78{,}400\ Nm = 78.4\ kJ$$

2. Temporary Model Selection

KESS110-400H $\qquad E_T = 100\,[kJ] \qquad (E < E_T)$

3. Allowable Impact Frequency

$$C_e = 8 < 8 \cdot \frac{E_T}{E} = 8 \cdot \frac{100}{78.4} = 10.2\ [\text{impact/h}]$$

4. Required Stroke Calculation

$$S_e = S\left(\sqrt{\frac{E}{E_T\,(0.03V + 0.24)} + 1.36} - 1.17\right)$$

$$= 400\left(\sqrt{\frac{78.4}{100\,(0.03 \times 2.8 + 0.24)} + 1.36} - 1.17\right) = 290.8[\text{mm}]$$

5. Calculation of Effective Reaction

$$F_{ME} = \left[\left(\frac{RDmax - RDmin}{S}\right) S_e + RDmin\right](0.1 \times V_e + 0.8)$$

$$= \left[\left(\frac{320 - 175}{400}\right) \times 290.8 + 175\right](0.1 \times 2.8 + 0.8) = 302.8[\text{kN}]$$

6. Final Model Selection

KESS110-400H

E_T : Max Energy/cycle(kJ)

Application worksheet (Model selection)

Example : KESH Series

- Impact velocity (V_e) : 2.8 m/s
- Impactor mass (W_e) : 80 ton
- Impact frequency (C_e) : 8 impact/h
- Allowable Reaction Force : 650 kN

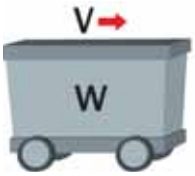

1. Energy calculation (E)

$$E = \frac{1}{2} W_e V_e^2 \qquad E = \frac{1}{2} \times 80{,}000 \times 2.8^2 = 313{,}600\ Nm = 313.6\ kJ$$

2. Temporary Model Selection

KESH175-850 $\qquad E_T = 400\,[kJ] \qquad (E < E_T)$

3. Allowable Impact Frequency

$$C_e = 8 < 8 \cdot \frac{E_T}{E} = 8 \cdot \frac{400}{313.6} = 10.2\ [\text{impact/h}]$$

4. Required Stroke Calculation

$$S_e = S\left(\sqrt{\frac{E}{E_T(0.03V + 0.24)} + 1.36} - 1.17\right)$$

$$= 850\left(\sqrt{\frac{313.6}{400\,(0.03 \times 2.8 + 0.24)} + 1.36} - 1.17\right) = 658.0[\text{mm}]$$

5. Calculation of Effective Reaction

$$F_{ME} = \left[\left(\frac{RDmax - RDmin}{S}\right)S_e + RDmin\right](0.1 \times V_e + 0.8)$$

$$= \left[\left(\frac{600\text{-}330}{850}\right) \times 658.0 + 330\right](0.1 \times 2.8 + 0.8) = 582.1[\text{kN}]$$

6. Final Model Selection

KESH175-850

E_T : Max Energy/cycle(kJ)

KESM Series
Engineering Data

Model	Stroke (mm) S	Max.Energy / Cycle (kJ) E_T	Dyn. Reaction Force (kN)		Impact Velocity (m/s)	Weight (kg)
			RDmin	RDmax	max	
KESM25- 12	12	0.1	6	11	2	0.3
KESM35- 22	22	0.4	14	27	4	0.7
KESM40- 22	22	0.4	14	27	5	0.8
KESM50- 35	35	1.5	28	60	5	1.9
KESM60- 35	35	1.5	28	60	5	2
KESM75- 45	45	3.5	45	100	5	5
KESM90- 60	60	7	90	150	5	10.5
KESM110-80	80	14	130	230	5	17

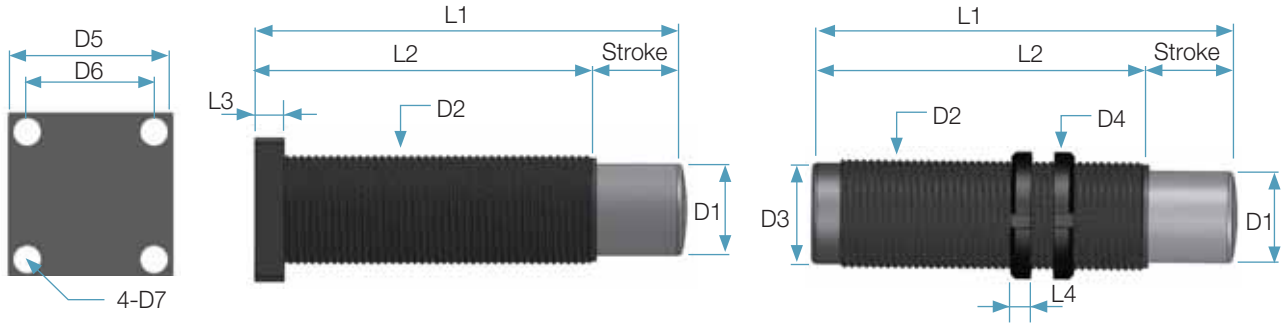

Dimensions (unit : mm)

Model	L1 mm	L2 mm	L3 mm	L4 mm	D1 mm	D2 mm	D3 mm	D4 mm	D5 mm	D6 mm	D7 mm
KESM25-12	75	53	10	7	19	M25x1.5	20	38	57	41	7
KESM35-22	120	98	12	8	25	M35x1.5	32	52	80	60	9
KESM40-22	120	98	12	9	25	M40x1.5	32	58	-	-	-
KESM50-35	175	140	12	11	38	M50x1.5	45	70	90	70	9
KESM60-35	175	140	12	11	38	M60x2.0	45	70	-	-	-
KESM75-45	213	168	10	13	60	M75x2.0	72	98	122	100	11
KESM90-60	270	210	12	16	74.5	M90x2.0	90	120	150	120	13
KESM110-80	337	257	14	19	90	M110x2.0	110	145	175	143	18

KESE Series
Engineering Data

Model	Stroke (mm) S	Max.Energy / Cycle (kJ) E_T	Dyn. Reaction Force (kN)		Impact Velocity (m/s)	Weight (kg)
			RDmin	RDmax	max	
KESE116-105	105	25	167	310	4	25
KESE142-130	130	50	260	500	4	37
KESE160-140	140	75	400	700	4	45
KESE180-160	160	100	470	820	4	73
KESE215-180	180	150	640	1100	4	117

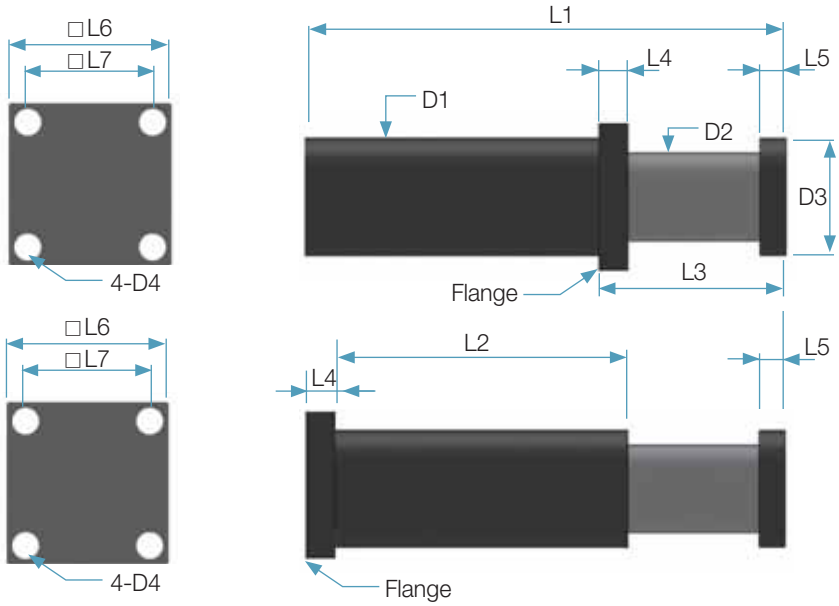

Dimensions (unit : mm)

Model	L1	L2	L3	L4	L5	L6	L7	D1	D2	D3	D4
KESE116-105	415	275	140	20	15	135	105	116	87	120	14
KESE142-130	500	325	175	30	15	155	125	142	117	140	15
KESE160-140	520	315	205	30	35	175	140	160	132	158	18
KESE180-160	585	350	235	35	40	215	170	180	153	185	22
KESE215-180	670	405	265	40	45	250	195	215	182	220	26

KESS Series
Engineering Data

Model	Stroke (mm) S	Max.Energy / Cycle (kJ) E_T	Dyn. Reaction Force (kN)		Impact Velocity (m/s)	Weight (kg)
			RDmin	RDmax	max	
KESS50- 150	150	6	25	50	3	4.2
KESS75- 150	150	12	66	100	3	11
KESS75- 200	200	12	42	78	3	11
KESS90- 200	200	25	95	150	3	20
KESS90- 270	270	25	66	112	3	25
KESS110- 275	275	50	118	230	3	40
KESS110- 400	400	50	75	150	3	40
KESS110-400H	400	100	175	320	3	65
KESS110- 600	600	100	85	230	3	65
KESS110- 800	800	150	80	250	3	115

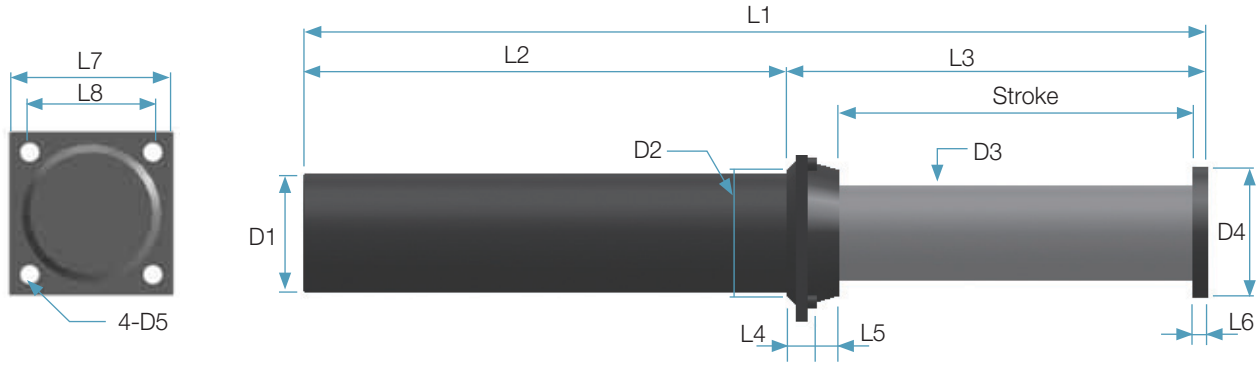

Dimensions (unit : mm)

Model	L1 mm	L2 mm	L3 mm	L4 mm	L5 mm	L6 mm	L7 mm	L8 mm	D1 mm	D2 mm	D3 mm	D4 mm	D5 mm
KESS50- 150	410	231	179	19	0	10	90	70	50	90	38	50	9
KESS75- 150	480	285	195	18	15	12	110	85	75	90	57	80	11
KESS75- 200	530	285	245	18	15	12	110	85	75	90	57	80	11
KESS90- 200	620	370	250	20	18	12	135	105	90	110	72	100	14
KESS90- 270	690	370	320	20	18	12	135	105	90	110	72	100	14
KESS110-275	855	520	335	25	20	15	175	140	110	150	87	120	18
KESS110-400	980	520	460	25	20	15	175	140	110	150	87	120	18
KESS110-400H	1,370	910	460	25	20	15	175	140	110	150	87	120	18
KESS110-600	1,570	910	660	25	20	15	175	140	110	150	87	120	18
KESS110-800	2,640	1,780	860	25	20	15	175	140	110	150	87	120	18

KESH Series
Engineering Data

Model	Stroke (mm) S	Max.Energy / Cycle (kJ) E_T	Dyn. Reaction Force (kN)		Impact Velocity (m/s)	Weight (kg)
			RDmin	RDmax	max	
KESH130- 400	400	100	190	310	3	63
KESH140- 500	500	150	200	380	3	90
KESH140-400H	400	220	380	685	3	100
KESH155- 650	650	250	270	490	3	135
KESH175- 850	850	400	330	600	3	218
KESH200- 1050	1,050	600	370	740	3	295
KESH220- 1200	1,200	800	430	860	3	420
KESH230- 1300	1,300	1,000	500	1,000	3	470

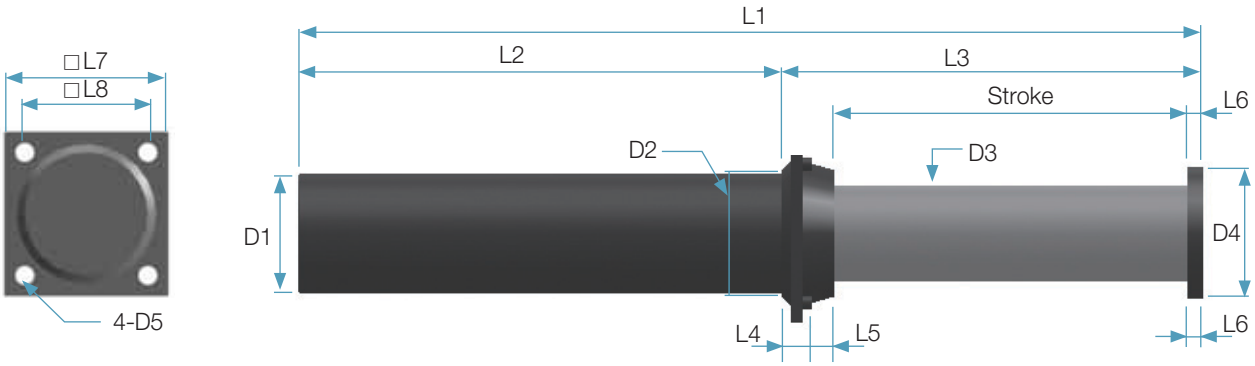

Dimensions (unit : mm)

Model	L1	L2	L3	L4	L5	L6	L7	L8	D1	D2	D3	D4	D5
	mm	mm	mm	mm	mm	mm	mm	mm	mm	mm	mm	mm	mm
KESH130- 400	1,120	660	460	25	20	15	175	140	130	150	110	140	18
KESH140- 500	1,350	775	575	30	25	20	215	170	140	185	120	150	22
KESH140-400H	1,258	783	475	30	25	20	215	170	140	185	120	150	22
KESH155- 650	1,750	1,025	725	30	25	20	215	170	155	185	135	170	22
KESH175- 850	2,185	1,250	935	35	25	25	265	210	175	235	150	190	27
KESH200- 1050	2,555	1,420	1,135	35	25	25	265	210	200	235	175	215	27
KESH220- 1200	2,935	1,630	1,305	40	35	30	300	240	220	270	190	235	30
KESH230- 1300	3,225	1,820	1,405	40	35	30	300	240	230	270	205	248	30

KVD Series
Elasto-Fluid Heavy Duty Buffer

KOBA
Best Energy Absorption

KVD Series is designed and developed to use the unique hydrostatic compression characteristics of special Visco-elastomers. KVD has compact and reliable design and high damping coefficient. KVD has advantage to get energy absorption and return spring function in a single unit without additional gas or mechanical spring

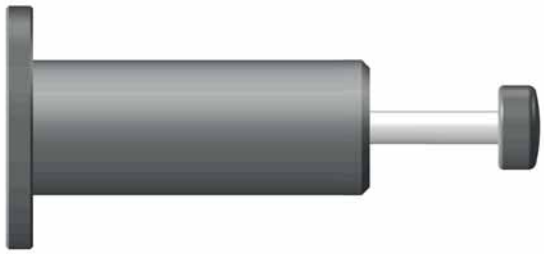

Rear Flange Mount type

Feature

- Long life span without maintenance and leakage
- 700kN up to 1,500kN(customer product)
- Temp erature range : -20℃~80℃
- Impact velocity : 0.02 ~ 5m/s
- Option : Bellows, Safety Cable
- Body protection : zinc plated or epoxy painting
- Option : Special painting : -40℃~120℃

KVD Series Ordering Information

KVD 100 - 100 - RS - BC

- BC — Accessory
  - C : Safety Cable
  - B : Bellows
- RS — Mount Type
  - Mount Type
  - RS : Rear Flange Mount
  - FS : Front Flange Mount(option)
- 100 — Stroke
- 100 — Body Dia.
- KVD

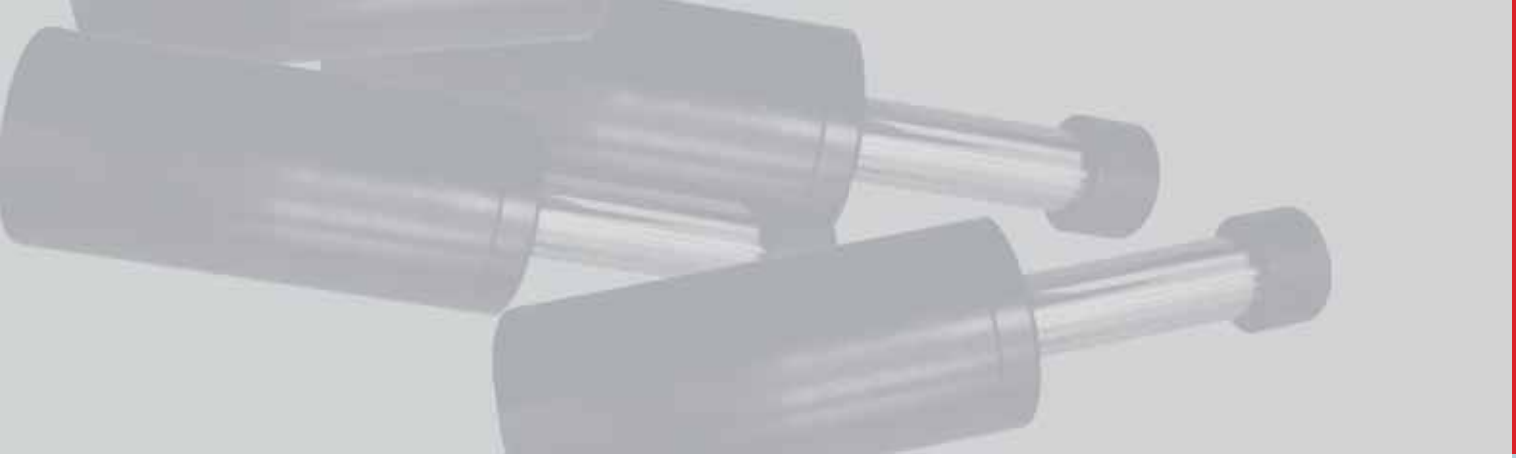

KVD Series

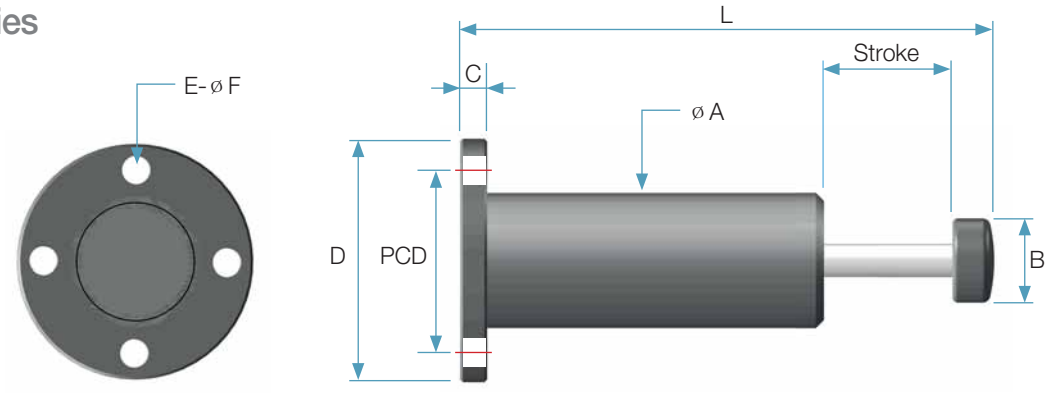

Engineering Data & Dimensions

Model	Stroke (mm)	Max. Energy /Cycle (kJ)	Max. Dynamic Force (kN)	Preload (kN)	L (mm)	Ø A (mm)	B (mm)	C (mm)	D (mm)	PCD (mm)	E-ØF (mm)	Weight (kg)
KVD55- 50	50	3	76	4	220	55	28	12	90	70	4-Ø9	3
KVD100- 50	50	9	236	23	250	100	32	17	155	130	4-Ø18	9
KVD100-100	100	18			360							11
KVD130-100	100	33	421	40	385	130	54	28	222	176	4-Ø26	19
KVD130-150	150	50			495							20
KVD180-100	100	51	643	88	430	180	58	45	322	251	8-Ø30	46
KVD180-200	200	102			650							50
KVD180-300	300	154			880							56

Accessory

Bellows Cover

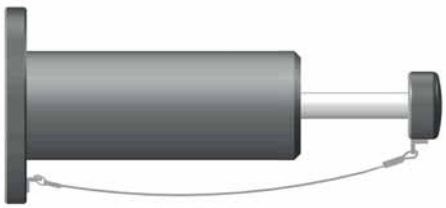

Safety Cable

KRC Series
Rate Controls

KOBA
Best Energy Absorption

KRC Series - adjustable speed controls

KRC is designed to control the speed of movement smoothly and safely in single and double acting with compression and tension. KRC has 12 step dial so you could adjust the movement speed in accordance with the condition of application.

Feature

- cycle rate : 60 cycle/h
- operation velocity up to 0.6 m/s
- temp range (-10~80℃)
  Special (-30~100℃)
- Piston Rod : Hard Chrome(25㎛)
- Body Mount : Black Oxide or Ni Plated

KRC Series Ordering Information

KRC 30 - 50 - E

- E: Direction : E(expansion), C(compression), EC(both sided)
- 50: Stroke
- 30: Body Dia
- KRC: Series

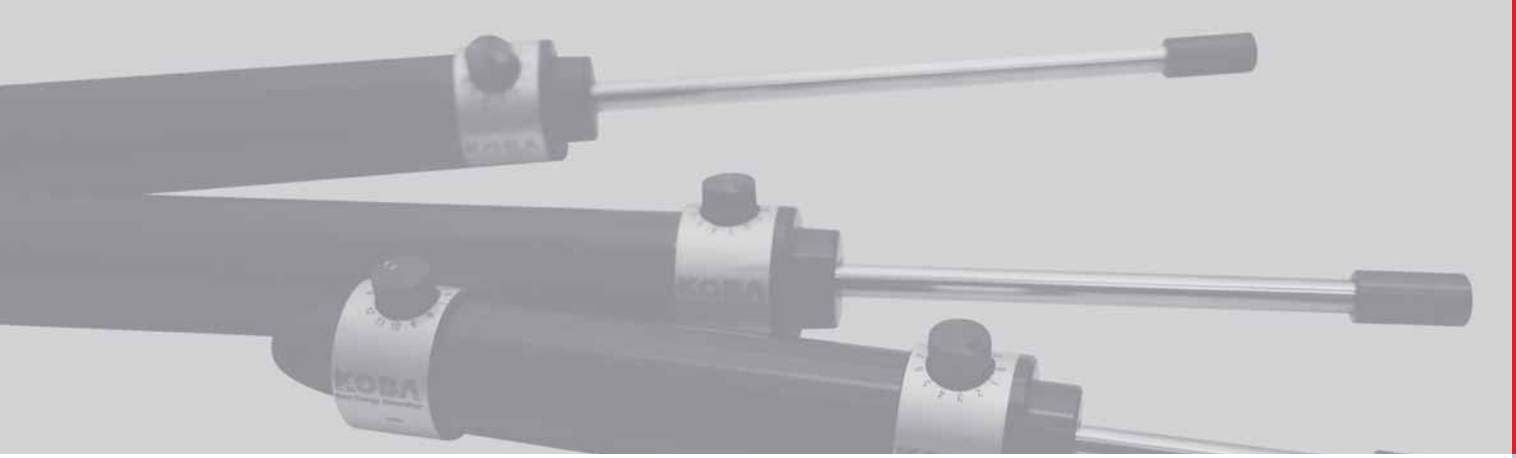

KRC 30 Series
Engineering Data & Dimensions

Model	Stroke (mm) S	Max. Propelling Force (N)		Weight (g)	Dimensions (m/m)			Direction
		Ext	Comp		A	B	C	
KRC30-50	50	3,000	3,000	310	250	200	176	E,C,E&C
-100	100	3,000	2,600	380	350	250	226	E,C,E&C
-150	150	3,000	2,100	450	450	300	276	E,C,E&C
-200	200	3,000	1,400	530	550	350	326	E,C,E&C
-250	250	3,000	800	600	650	400	376	E,C,E&C

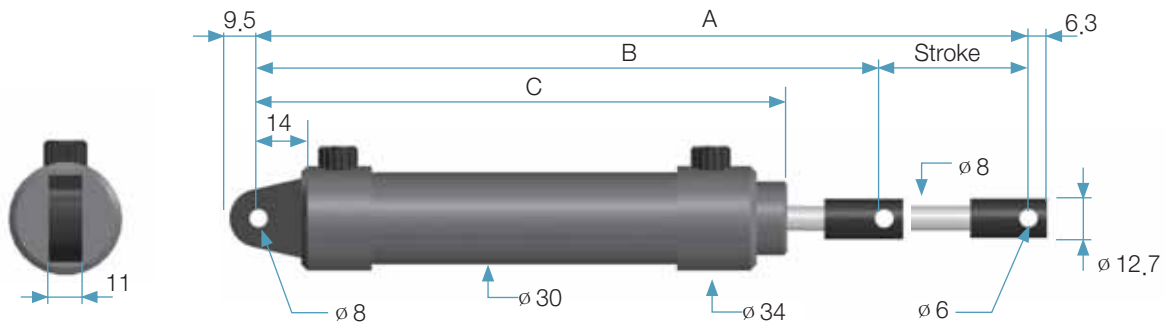

Adjustment Diagram

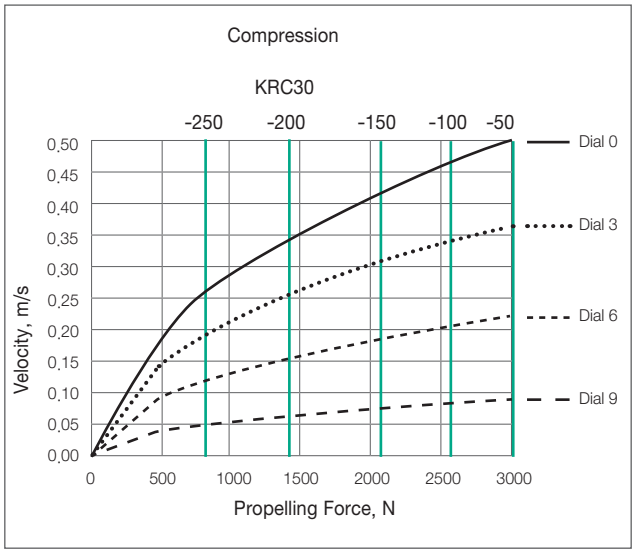

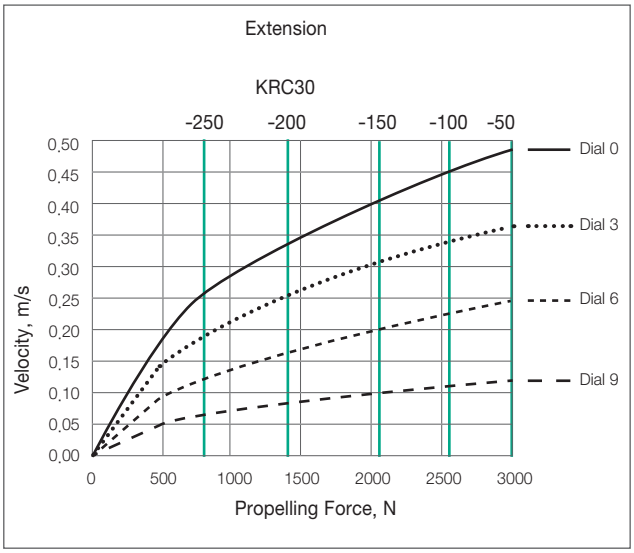

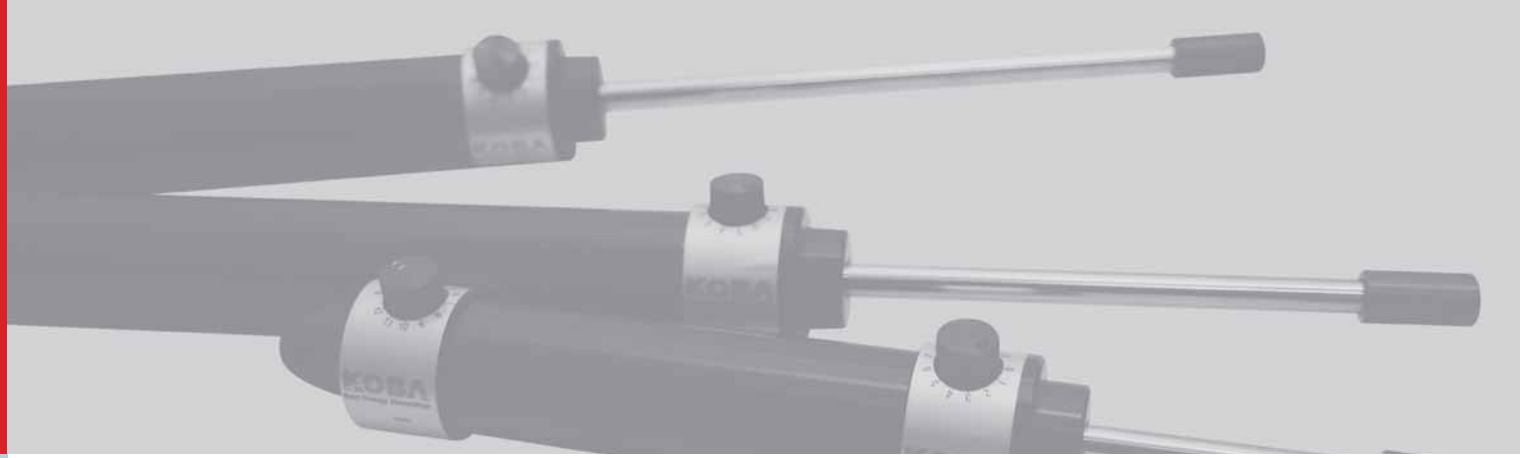

KRC 50 Series
Engineering Data & Dimensions

Model	Stroke (mm) S	Max. Propelling Force (N)		Weight (g)	Dimensions (mm)			Direction
		Ext	Comp		A	B	C	
KRC50-50	50	11,000	11,000	2,000	250	200	175	E,C,E&C
-100	100	11,000	11,000	2,500	350	250	225	E,C,E&C
-150	150	11,000	11,000	3,000	450	300	275	E,C,E&C
-200	200	11,000	11,000	3,300	550	350	325	E,C,E&C
-250	250	11,000	11,000	3,600	650	400	375	E,C,E&C

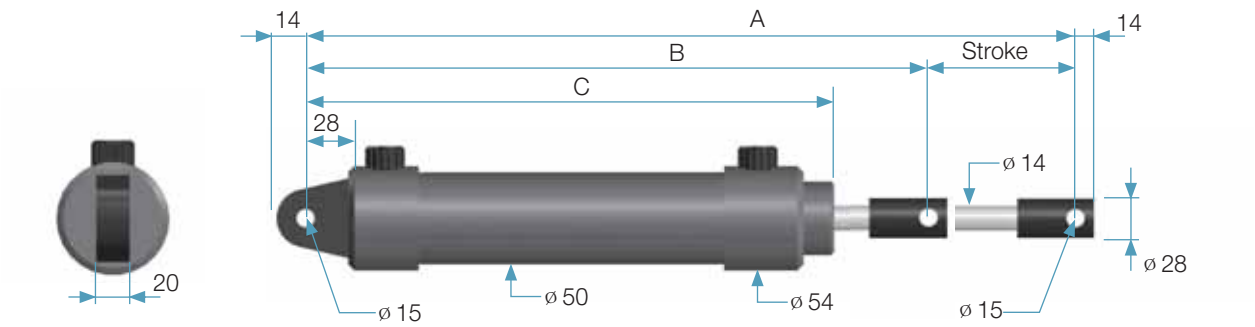

Adjustment Diagram

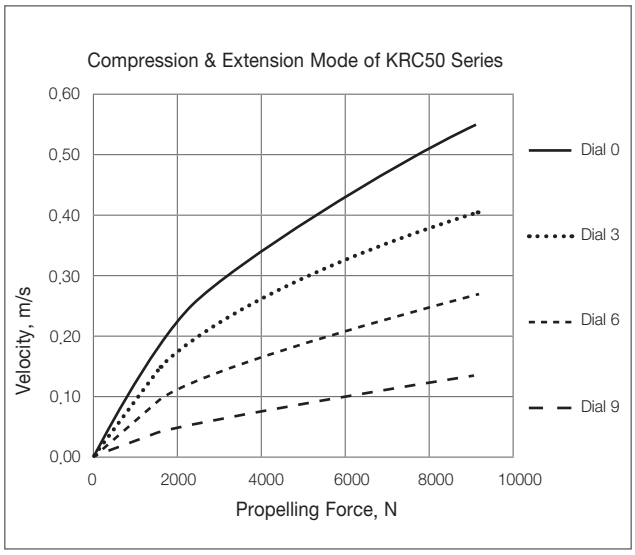

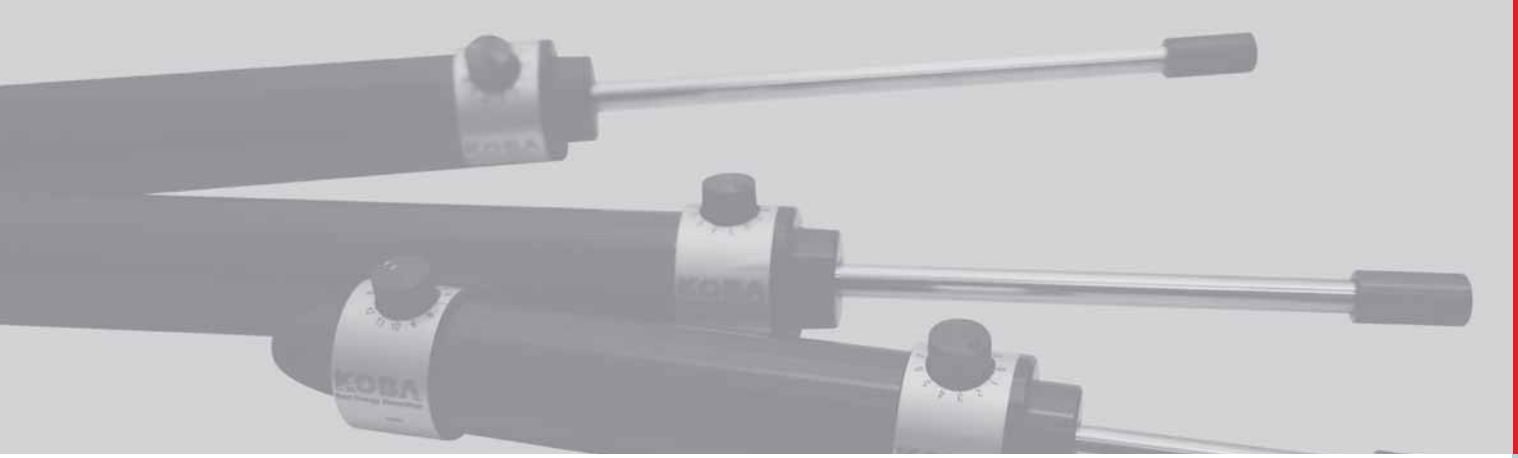

KRC 70 Series
Engineering Data & Dimensions

Model	Stroke (mm) S	Max. Propelling Force (N)		Weight (g)	Dimensions (mm)		Direction
		Ext	Comp		A	B	
KRC70-50	50	20,500	20,500	1,700	237	180	E,C,E&C
-100	100	20,500	20,500	2,100	339	231	E,C,E&C
-150	150	20,500	20,500	2,400	441	282	E,C,E&C
-200	200	20,500	20,500	2,700	541	332	E,C,E&C
-250	250	20,500	20,500	3,000	643	383	E,C,E&C
-300	300	20,500	20,500	3,300	745	434	E,C,E&C
-350	350	20,500	20,500	3,700	847	485	E,C,E&C

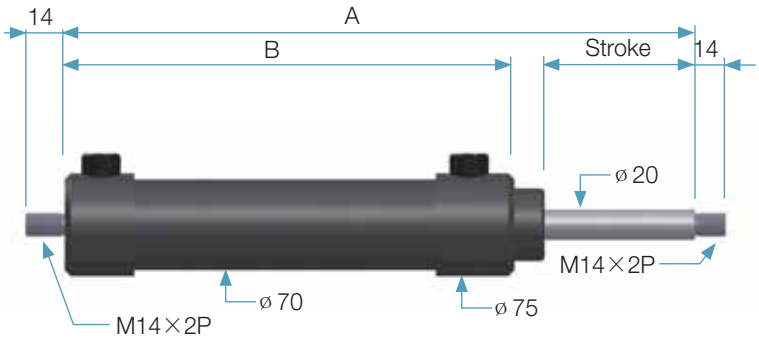

Adjustment Diagram

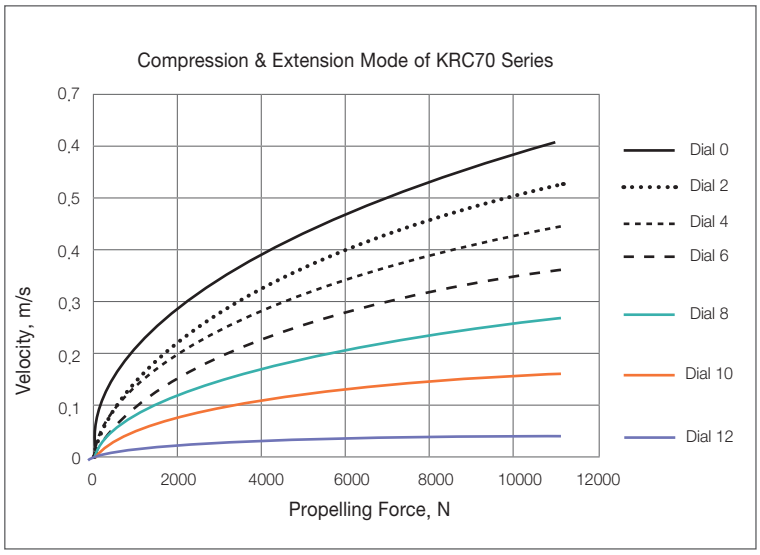

KHC Series
Hydro Check

KOBA
Best Energy Absorption

Properties

- Hydro Check Series enables precise speed and location control for the moving loads with various strokes
- Hydro Check is easy to install and control and enables precise control of moving speed with a wide-range. Adjustment Knob(300°) to elongate the lifespan of machine and tools. it is used for precise operations
- Piston Rod is plated with hard Cr and the body is plated to prevent damage during operations.
- Accessory is easily fixed to Hydro Check with Snap Ring and Mounting Block and is easy to be relocated.
- Hydro Check offers automatically filtered oil to offer highest precision and longest life span.
- Application : Where speed control is required.e.g. Drilling Machine, Cutting Machine
- Standard temp range (-10 up to 80℃)
  Special (-30 up to 100℃)

KHC Series Ordering Information

KHC 24 - 15 - S - SO

- SO : Customer Product
- S : Step Check unit
- Stroke
- Body Diameter
- Series

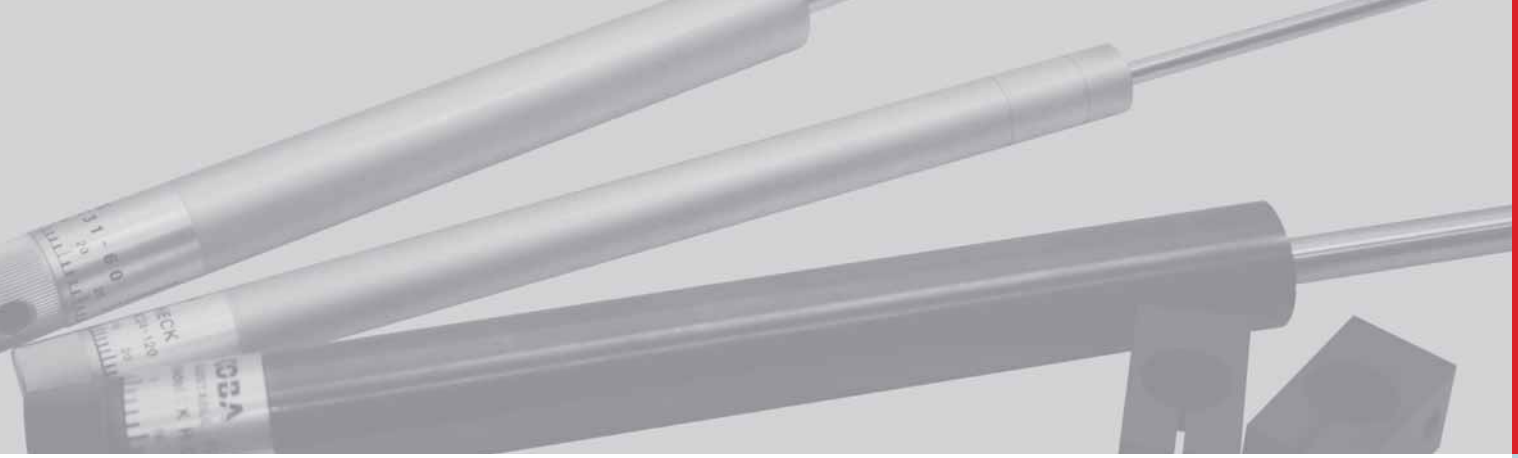

KHC 24 Series
Dimensions & Engineering Data

Model	Stroke (mm) S	Dimensionds (mm)			Max Load Angle From Axis	Speed Adjustment Range		Weight (g)
		A	B	C		Load Limits (N)	Feed Rate Limits (mm/s)	
KHC24 - 15	15	157.5	21	26	1.2°	100~2,500	0.2~30	385
-30	30	202.5	19		1°			450
-60	60	312.5	16		0.5°			635
-90	90	382.5	16		0.3°			745
-120	120	472.5	16		0.2°			885

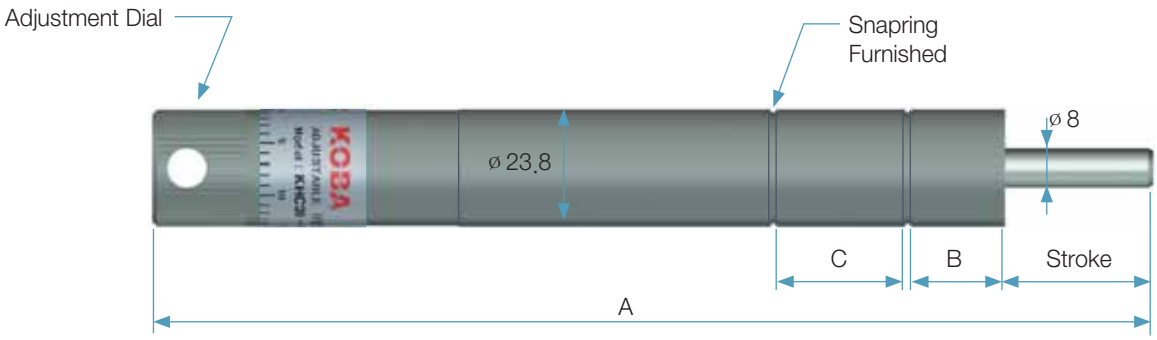

Mount Block

MB 24

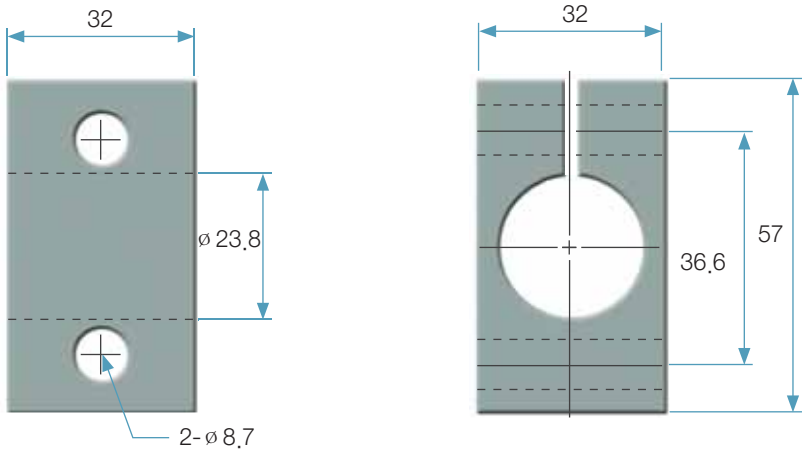

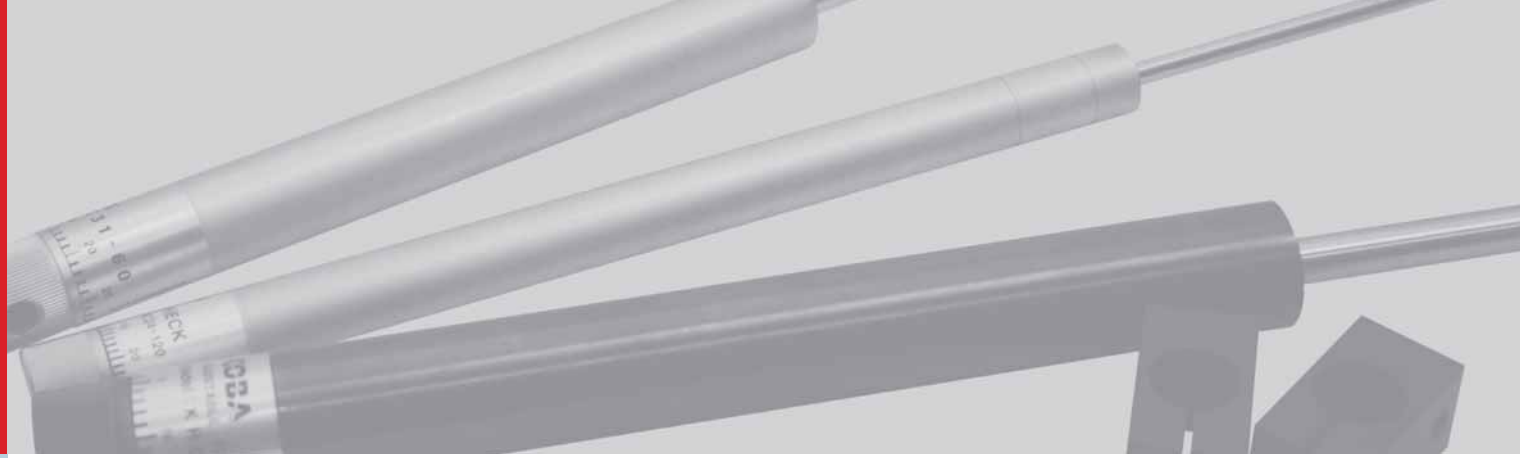

KHC 31,38 Series
Dimensions & Engineering Data

Model	Stroke (mm) S	Dimensionds (mm)				Max Load Angle From Axis	Speed Adjustment Range		Weight (g)
		A	B	C	D		Load Limits (N)	Feed Rate Limits (mm/s)	
KHC31-40	40	270	230	31	12	1°	450 -3,500	0.2-30	1,040
-60	60	340	279			0.5°			1,245
-100	100	476	375			0.3°			1,655
KHC38-60	60	321	261	38	14	0.5°	1,500 -5,000	0.3-30	2,490
-100	100	454	354			0.3°			3,310

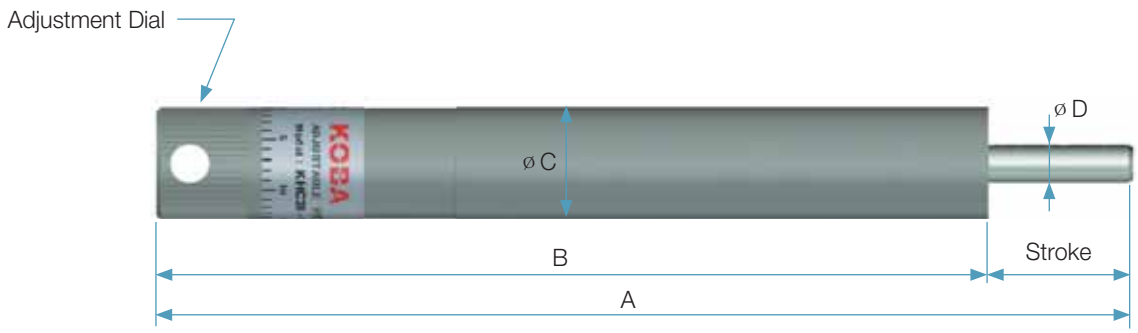

Mount Block

MB 31

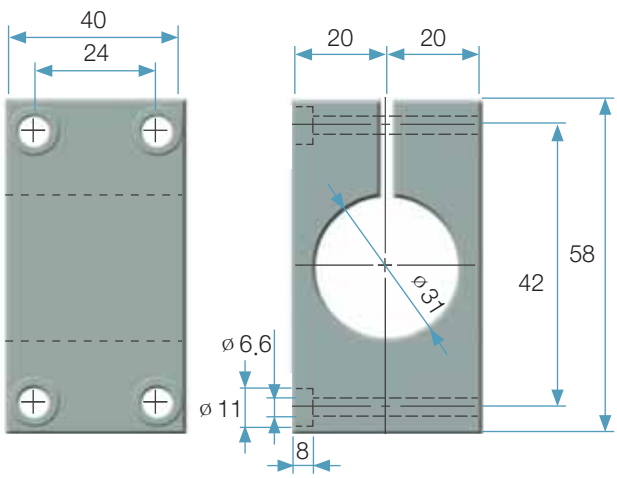

MB 38

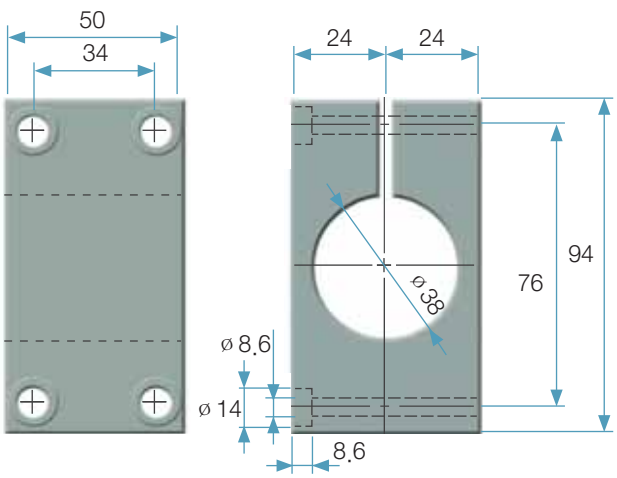

Step Check Unit Series

Step check unit (KHC-S) has same function as that of hydro check but this model can be stopped at the position that you want so it can be used in Load drilling, Precision work and the process that has to be discharged clips during operation. It is possible to manufacture “customer product”.

Dimensions & Engineering Data

Model	Stroke (mm)	A (mm)	B (mm)	C (mm)	D (mm)	E (mm)	F (mm)	Return Type	Weight (g)
KHC24-30S	30	224.5	22	35	8	23.8	32	Air Return	500
-60S	60	332.5							685
-90S	90	404.5							795
-120S	120	494.5							935

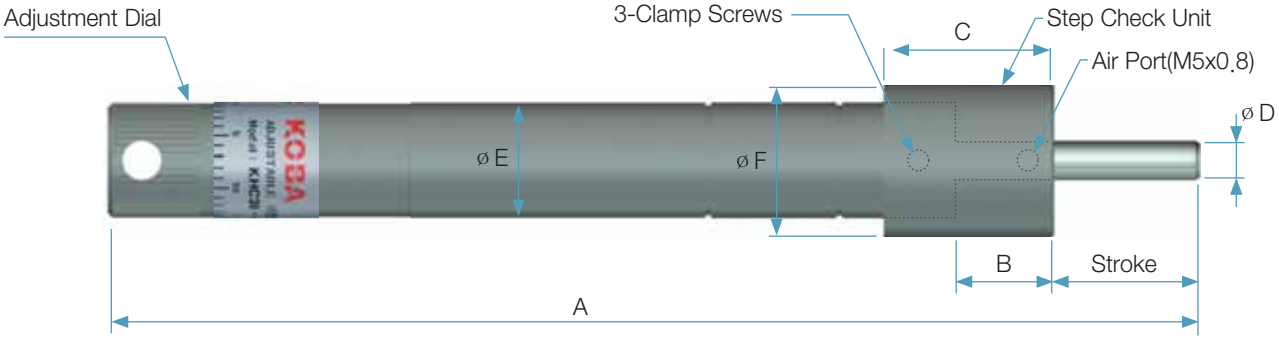

Hydro Check Installation

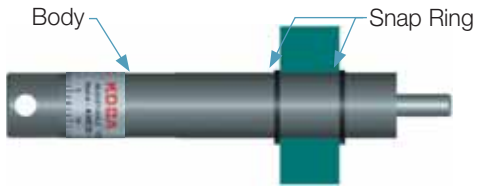	When the driving force is not high, you may install Hydro check with two snap ring.
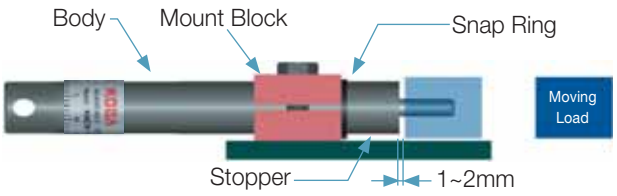	Mount Block is recommended when the driving force is high and to install product at the desired location.

Safety Suggestions

1. Do not fasten Hydro Check body with bolt or alter it in anyway. (Contact us if it needed)
2. Refer to the chart in the catalog to control the angle of Hydro Check. If the location of installation is offset, it may cause unbalanced absorption to shorten the lifespan of Hydro Check or damage it.

Gas Spring
KG Series
압축 type

KOBA
Best Energy Absorption

Feature

- KG is used to Nitrogen Gas and has general specific characteristics of Spring, long stroke, small repulsive force, lifts big loads with small unit.
- KG has various range of stroke and force. KOBA supply Customer Products for size, stroke, material, etc.
- Temperature : Standard (-10~60℃) Special (-30~100℃)

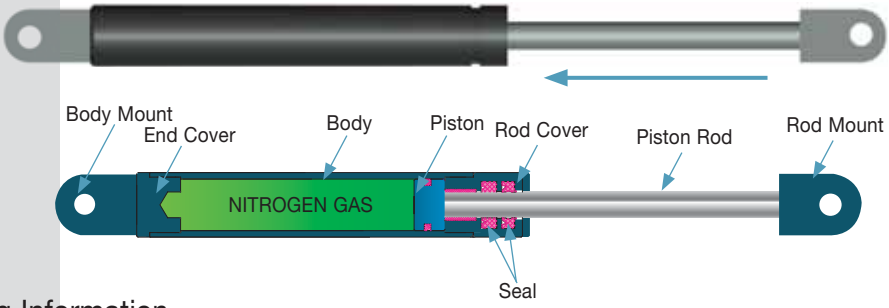

KG Series Ordering Information

KG 30 - 100 - H H - 100N - 268

- 268 — Installation distance
- 100N — Nominal Force
- H — Body Mount Type
- H — Rod Mount Type
- 100 — Stroke
- 30 — Body Dia
- KG — Series

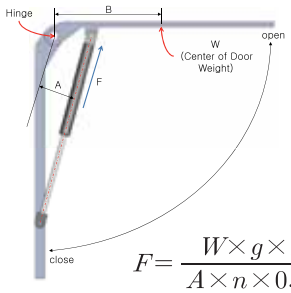

$$F = \frac{W \times g \times B}{A \times n \times 0.95} (N)$$

To get smooth operation of gas spring, Please install it like above picture (the Body of gas spring is located upward)

F : Spring force(N)
W : Gate Weight(Kg)
A : Distance from Hinge to Gas Spring(m)
B : Distance from Hinge to the Center of Gravity(m)
N : Number of Gas Spring in parallel
G : Gravitational Acceleration (9.8m/sec2)

KG 15, 18, 22, 30 Series

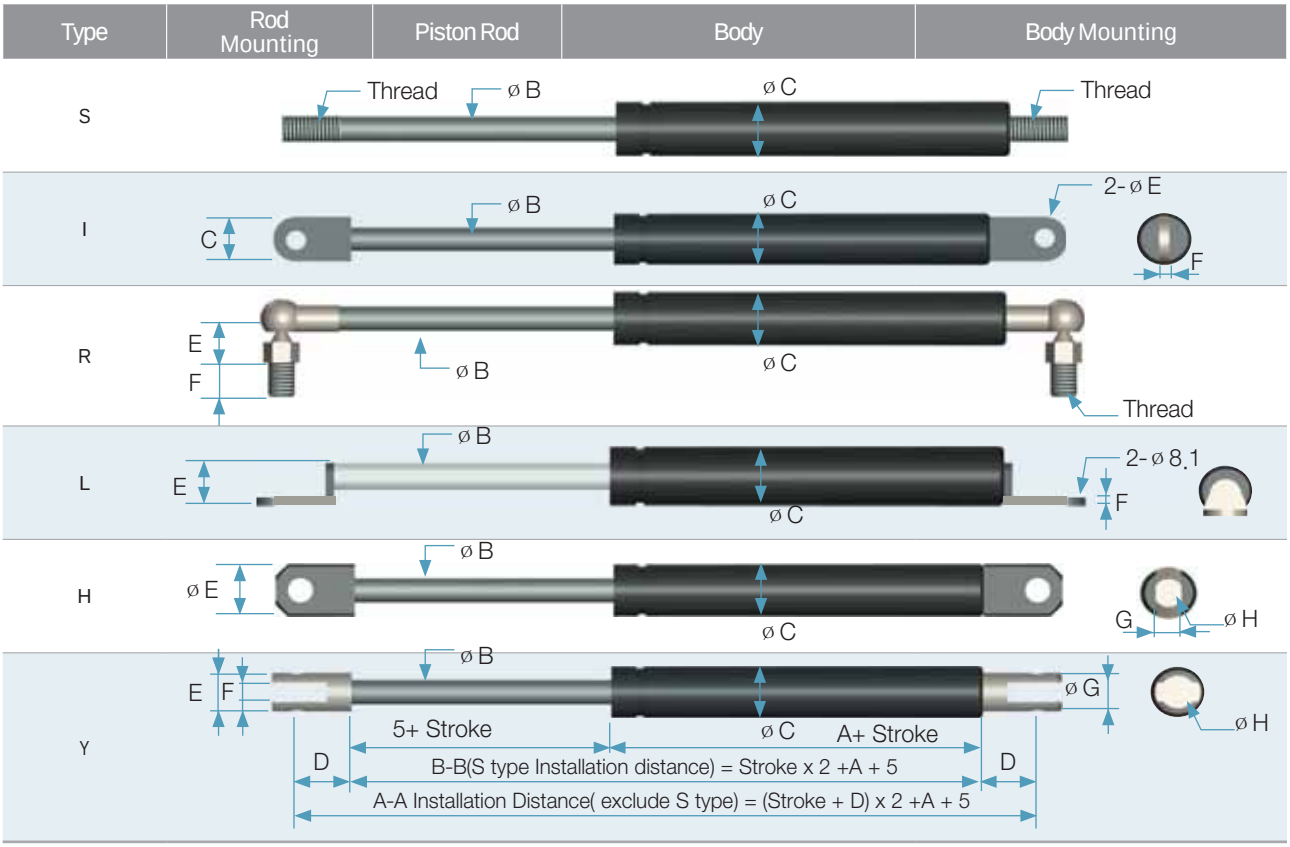

Dimension (unit : mm)

Model	Max Stroke (mm)	A	B	C	Mount Type	D	E	F	G	H	Thread	Max Force (N)
KG15	200	35	6	15	S	8	-	-	-	-	M6x1.0	Below 300
					I	13	8.1	3.2	-	-	-	
					R	20	13	12.5	-	-	M6x1.0	
					L	15	9	3.2	-	-	-	
KG18	250	40	8	18	S	10	-	-	-	-	M8x1.25	Below 600
					I	20	8.1	4.0	-	-	-	
					R	22	18	14	-	-	M10x1.5	
					L	15	9	3.2	-	-	-	
					H	19	18	-	10	8.1	-	
					Y	32	16	8	18	8.1	-	
KG22	300	60	10	22	S	10	-	-	-	-	M10x1.5	Below 900
					I	19	8.1	4.0	-	-	-	
					R	22	18	14	-	-	M10x1.5	
					L	15	11	3.2	-	-	-	
					H	19	22	-	10	8.1	-	
					Y	32	16	8	18	8.1	-	
KG30	350	60	16	30	S	18	-	-	-	-	M14x2.0	Below 1,200
					R	57	21.5	42.5	-	-	M14x2.0	
					H	35	30	-	20	15	-	

KG 35, 40, 50, 75, 100 Series

Type	Rod Mounting	Piston Rod	Body	Body Mounting

S

R

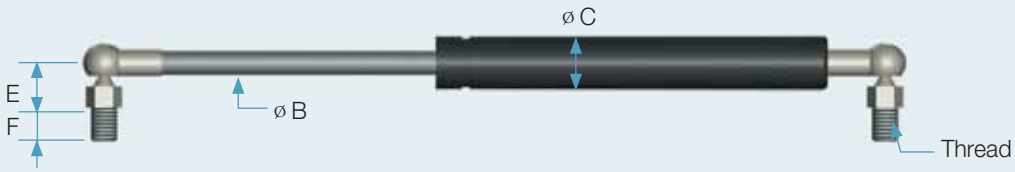

H

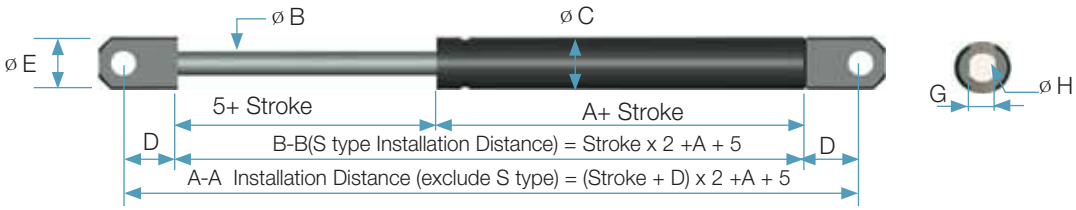

Dimension (unit : mm)

Model	Max Stroke (mm)	A	B	C	Mount Type	D	E	F	G	H	Thread	Max Force (N)
KG35	400	70	20	35	S	22	-	-	-	-	M16x1.5	Below 2,000
					R	64	23.5	43	-	-	M16x1.5	
					H	35	30	-	20	15	-	
KG40	500	70	20	40	S	25	-	-	-	-	M18x1.5	Below 3,000
					R	71	28	42	-	-	M18x1.5	
					H	40	35	-	28	16	-	
KG50	700	80	25	50	S	30	-	-	-	-	M20x1.5	Below 5,000
					R	78	27	43	-	-	M20x1.5	
					H	50	40	-	34	20	-	
KG75	1,000	140	35	75	S	35	-	-	-	-	M24x2.0	Below 8,000
					R	94	30	51	-	-	M24x2.0	
					H	70	60	-	40	30	-	
KG100	1,300	170	40	100	S	35	-	-	-	-	M30x2.0	Below 12,000
					R	110	35	56	-	-	M30x2.0	
					H	75	70	-	50	35	-	

KOBA
Best Energy Absorption

Gas Spring KGP Series
(Pull type)

Feature

- KGP is Pull type gas spring. It is widely used to operate mechanical covers with low strength to open/close covers on machines/tanks that operate horizontally. KOBA supply Customer Products for size, stroke, material, etc.
- Temperature : Standard (-10~60℃) Special (-30~100℃)

KGP Series Ordering Information

KGP 30 - 100 - H H - 100N - 268

- Installation distance
- Nominal Force
- Body Mount Type
- Rod Mount Type
- Stroke
- Body Dia
- Series

KGP 22, 30, 35, 40, 50, 75 Series

Type	Rod Mounting	Piston Rod	Body	Body Mounting

S

R

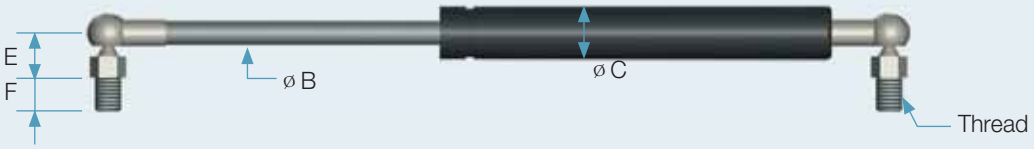

H

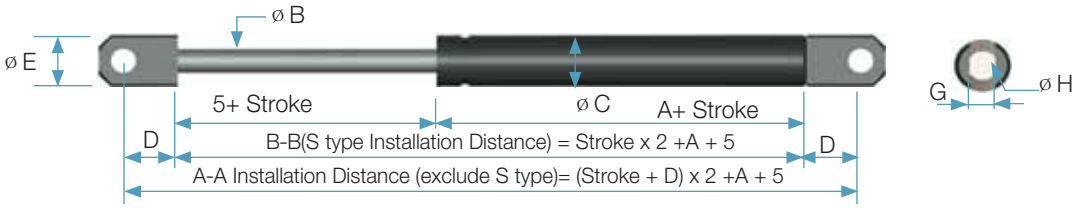

Dimension (unit : mm)

Model	Max Stroke	A	B	C	Mount Type	D	E	F	G	H	Thread	Max Force (N)
KGP22	300	80	10	22	S	10	-	-	-	-	M8x1.25	Below 200
					R	22	18	14	-	-	M10x1.5	
					H	19	22	-	10	10.1	-	
KGP30	350	90	12	30	S	18	-	-	-	-	M10x1.5	Below 900
					R	22	18	14	-	-		
					H	35	30	-	20	15	-	
KGP35	400	125	14	35	S	22	-	-	-	-	M12x1.75	Below 1,200
					R	50	19	30	-	-		
					H	35	30	-	20	15	-	
KGP40	500	130	16	40	S	25	-	-	-	-	M14x2	Below 1,500
					R	57	21.5	42.5	-	-		
					H	40	35	-	28	16	-	
KGP50	700	130	25	50	S	35	-	-	-	-	M20x1.5	Below 2,000
					R	78	27	43	-	-		
					H	50	50	-	34	20	-	
KGP75	1,000	130	25	75	S	41	-	-	-	-	M24x2.0	Below 3,000
					R	94	30	51	-	-		
					H	70	60	-	40	30	-	